MAIN RESIDENCE

PRESCRIPTIVE PROTOTYPE #3 DESIGN FOR ONE STORY WOOD STRUCTURE MODEL WITH WOOD ROOF HOME IN PUERTO RICO

PREFACE:

THIS PRESCRIPTIVE HOME DRAWING SET PRESENTS RECOMMENDATIONS FOR THE CONSTRUCTION OF A ONE STORY HOME. THIS GUIDANCE DISPLAYS INFORMATION FOR A PARTICULAR SIZED HOME. THE DESIGN INFORMATION PROVIDED HEREIN INCORPORATES SEISMIC AND WIND CRITERIA BASED UPON THE LATEST PUERTO RICO BUILDING CODE WHICH REFERENCES THE 2018 INTERNATIONAL RESIDENTIAL CODE (2018 IRC), 2018 INTERNATIONAL BUILDING CODE (2018 IBC), AND THE AMERICAN SOCIETY OF CIVIL ENGINEERS ASCE/SEI 7-16: MINIMUM DESIGN LOADS AND ASSOCIATED CRITIERIA FOR BUILDINGS AND OTHER STRUCTURES.

ALL RECOMMENDED DESIGN WORK, INCLUDING THOSE PARTS COVERED BY THIS DOCUMENT, SHALL BE DESIGNED BY A REGISTERED DESIGN PROFESSIONAL SUCH AS A REGISTERED PROFESSIONAL ENGINEER OR A LICENSED ARCHITECT IN PUERTO RICO. WHEN THESE GUIDANCE DRAWINGS ARE USED FOR A PROJECT, THEY SHOULD BE MODIFIED AS NEEDED IN ORDER TO COMPLY WITH ALL OF THE APPLICABLE CODE REQUIREMENTS FOR A GIVEN PROJECT SITE, THEN SIGNED AND SEALED IN ACCORDANCE WITH PUERTO RICO LAWS, BUILDING CODE, AND DEPARTMENT OF ECONOMIC DEVELOPMENT AND COMMERENCE (DDEC). THIS SET ASSUMES A FLAT PROJECT SITE , IF THE SITE IS NOT FLAT, A REGISTERED PROFESSIONAL ENGINEER OR A LICENSED ARCHITECT WILL NEED TO MODIFY THE FOUNDATION DESIGN. A GEOTECHNICAL ENGINEER MAY ALSO BE REQUIRED TO PERFORM A SLOPE STABILITY ANALYSIS AND PROVIDE SOIL CONDITIONS FOR THE DESIGN OF A REVISED HOUSE FOUNDATION.

THE FOLLOWING BOUNDARY CONDITIONS SHALL BE MET IN ORDER TO USE THIS DRAWING SET. THIS DRAWING SET IS NOT VALID IF THE PROJECT PARAMETERS ARE OUTSIDE OF THESE BOUNDARY CONDITIONS:

1. SINGLE STORY BUILDING WITH THE MAXIMUM MEAN ROOF HEIGHT AS SHOWN IN THE DRAWING SET.

2. GABLE ROOF AS SHOWN IN THE DRAWING SET.

3. BUILDING WIDTH AND LENGTH AS SHOWN IN THE DRAWING SET.

ALL CONSTRUCTION MUST COMPLY WITH THE PUERTO RICO BUILDING CODE.
YOU ARE REQUIRED TO OBTAIN THE NECESSARY BUILDING PERMITS FROM THE DEPARTMENT OF ECONOMIC DEVELOPMENT AND COMMERCE (DDEC). SIGNED AND SEALED DRAWINGS FOR PERMIT MUST BE SUBMITTED TO THE DEPARTMENT OF ECONOMIC DEVELOPMENT AND COMMERCE (DDEC), PERMITS MANAGEMENT OFFICE (OGPe-DDEC).
STRUCTURES LOCATED IN SPECIAL FLOOD HAZARD AREAS SHALL BE DESIGNED BY A REGISTERED DESIGN PROFESSIONAL AND CERTIFIED TO COMPY WITH ASCE 24-14 FLOOD RESISTANT DESIGN AND CONSTRUCTION.
INFORMATION ABOUT STORM SURGE CAN BE ACCESSED AT HTTPS://NHC.NOAA.GOV/NATIONALSURGE/, BY CLICKING ON PUERTO RICO. ADDITIONAL FLOOD DESIGN INFORMATION CAN BE ACCESSED AT THE FEMA FLOOD MAP SERVICE CENTER HTTPS://MSC.FEMA.GOV/PORTAL/ADVANCESEARCH BY SELECTING PUERTO RICO FOR THE STATE AND THEN SELECTING THE APPROPRIATE COUNTY FOR PROJECT LOCATION. REFER TO PLANNING REGULATION 13: SPECIAL FLOOD HAZARD AREAS REGULATION, WHICH PROVIDES ADDITIONAL FLOOD HAZARD REQUIREMENTS AT HTTP://JP.PR.GOV/

FEMA/DDEC DOES NOT SPECIFICALLY ENDORSE THE PRODUCTS OF ANY MANUFACTURER. PRODUCTS THAT EQUAL THE SPECIFICATIONS OF THE NOTED PRODUCTS MAY BE SUBSTITUTED

DRAWING INDEX

SHEET NUMBER	SHEET NAME
	ARCHITECTURAL
A-003	Title Sheet
A-300	Floor Plans, Elevations and Sections
A-301	Notes, Windows, Doors, Finishes, Bathrooms & Kitchen Schedules
A-302	Reflected Ceiling Plan
A-500	Wall Sections
A-510	Doors and Windows Details
A-511	Roofing Details
A-512	Module Joint Details
	STRUCTURAL
S-001	Title Sheet
S-002A	General Notes
S-002B	General Notes
S-003	Design Data
S-004	Schedule and hook Types
S-005	Foundation Plans
S-006	Floor Plan
S-007	Roof Framing Plans
S-008	Primary Structure Elevations
S-009	Primary Structure Elevations
S-010	Expansion Module Structure Elevations
S-011	Full House Section
S-012	Wall Sections
S-013	Foundation and Masonry Details
S-014	Wood Framing Details
S-015	Wood Framing Details
S-016	Window Protection Details
	PLUMBING
PL-102	Plumbing layout
PL-200	Plumbing notes and details
	ELECTRICAL
E-300	Electrical layout
E-301	Electrical notes and details

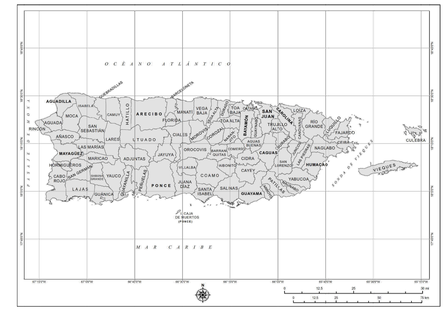

MAP OF PUERTO RICO (N.T.S.)

GENERAL LEGEND

ROOM KEY:
- ROOM NAME
- ROOM NUMBER

DETAIL KEY:
- DETAIL NUMBER
- DRAWING NUMBER

SPOT ELEVATION KEY

ENLARGED PLAN KEY

ALIGN KEY

EXTERIOR ELEVATION KEY

DIMENSION LINE

INTERIOR ELEVATION KEY

COLUMN LINE INDICATORS

MULTIPLE INTERIOR ELEVATIONS

REVISION KEY

DOOR NUMBER

KEYNOTE INDICATOR

ABBREVIATIONS

& - And
< - Angle
@ - At
℄ - Center Line
Ø - Diameter
- Pound
± - Tolerance Dimension
A/E - Architect / Engineer
ADDL - Additional
ADH - Adhesive
ADJ - Adjustable
ADJC - Adjacent
AF - Access Floor
AFF - Above Finished Floor
AL - Aluminum
ALT - Alternate
APPROX - Approximately
ARCH - Architect
BD - Board
BETW - Between
BLDG - Building
BLKG - Blocking
BM - Beam
BO - By Others
BOT - Bottom
CLG - Ceiling
CL- Closet
CLR - Clear
CMU - Concrete Masonry Unit
CNTR - Counter
COL - Column
CONC - Concrete
CONSTR - Construction
CONT - Continuous
CONTR - Contractor
CORR - Corridor
CT - Ceramic Tile
DIA - Diameter
DIM - Dimension
DN - Down
DOP - Door Opening
DR - Door
DTL - Detail
DWG - Drawing
EA - Each
EJ - Expansion Joint
EL - Elevation
ELEC - Electrical
ENCL - Enclosure
ENGR - Engineer
ENTR - Entrance
EQ - Equal
EQUIP - Equipment
EXT - Exterior
F/F - Face to Face
FDN - Foundation
FIN - Finish
FLR - Floor
FT - Foot or Feet
FTG - Footing
FUT - Future
GC - General Contractor
GND - Ground
GR - Grade
GWB - Gypsum Wall Board
HDW - Hardware
HT - Height
HM - Hollow Metal
HMD - Hollow Metal Door
HNDRL - Handrail
HORIZ - Horizontal
HP - High Point
IN - Inch or Inches
INSUL - Insulation
INT - Interior
JT - Joint
KIT - Kitchen
KO - Knockout
L - Length or Left
LAV - Lavatory
LF - Linear Foot or Feet
LNTL - Lintel
LONG - Longitudinal
LP - Low Point
LT - Light
LTG - Lighting
LTWT - Lightweight
MAS - Masonry
MATL - Material
MAX - Maximum
MECH - Mechanical
MED - Medium
MEMB - Membrane
MF - Metal Flashing
MFR - Manufacturer
MIN - Minimum
MIR - Mirror
MISC - Miscellaneous
ML - Metal Lath
MLDG - Molding
MLWK - Millwork
MO - Masonry Opening
MTD - Mounted
MTR - Mortar
MTL - Metal
MVBL - Movable
N - North
NA - Not Applicable
NIC - Not In Contract
NO - Number
NOM - Nominal
NTS - Not To Scale
OA - Overall
OC - On Center
OPNG - Opening
OPP - Opposite
PAR - Parallel
PERF - Perforated
PERIM - Perimeter
PERP - Perpendicular
PL - Plate
PLAS - Plaster
PLBG - Plumbing
PLYWD - Plywood
PNL - Panel
POL - Polished
PR - Pair
PREFIN - Prefinished
PT - Pressure Treated
PTD - Painted
PTN - Partition
QTY - Quantity
QUAL - Quality
RCP - Reflected Ceiling Plan
REC - Recessed
REF - Reference
REFR - Refrigerator
REINF - Reinforced or Reinforcing
REM - Removable
REQD - Required
REQMTS - Requirements
RFG - Roofing
RLG - Railing
RM - Room
RO - Rough Opening
S - South
SCHED - Schedule
SCR - Screw
SECT - Section
SF - Square Foot or Feet
SHR - Shower
SHT - Sheet
SHTG - Sheathing
SIM - Similar
SK - Sink
SM - Sheet Metal
SPEC - Specifications
SQ - Square
SS - Stainless Steel
SSF - Solid Surface
STD - Standard
STL - Steel
STRUCT - Structural
SUSP - Suspended
SYM - Symbol
SYMM - Symmetrical
SYP - Southern Yellow Pine
SYS - System
T - Treads (Stairs)
T&B - Top and Bottom
T&G - Tongue and Groove
TBD - To Be Determined
TBM - Top of Beam
TC - Top of Concrete
TEMP - Temporary
TF - Top of Footing
TFF - Top of Finished Floor
THK - Thickness
THRES - Threshold
THRU - Through
T.O. - Top Of
TOC - Top Of Concrete
TOF - Top of Footing
TOL - Tolerance
TOM - Top Of Masonry
TOP - Top of Pavement
TOS - Top Of Steel
TOSL - Top of Slab
TOW - Top Of Wall
TYP - Typical
UNFIN - Unfinished
UON - Unless Otherwise Noted
VB - Vapor Barrier or Vinyl Base
VER - Verify
VERT - Vertical
VEST - Vestibule
VIF - Contractor to Verify In Field
VR - Vapor Retarder
W - West
W/ - With
W/O - Without
WC - Water Closet
WD - Wood
WLD - Welded
WP - Working Point
WT - Weight
WTH - Width
WTPRF - Waterproofing
WWF - Welded Wire Fabric

CONSULTANT:

CLIENT:

PROJECT NAME:

ONE STORY WOOD HOME

NOTE: PRIOR TO CONSTRUCTION CONTACT PUERTO RICO DEPARTMENT OF ECONOMIC DEVELOPMENT AND COMMERCE (DDEC), PERMITS MANAGEMENT OFFICE (OGPe-DDEC) FOR BUILDING REQUIREMENTS IN PUERTO RICO. THIS INFORMATION HAS BEEN DEVELOPED FOR THE USE OF PUERTO RICO RESIDENTS AND IS BELIEVED TO MEET THE PUERTO RICO BUILDING CODE. ALL DRAWINGS MUST BE SEPARATELY APPROVED BY DDEC, PERMITS MANAGEMENT OFFICE UPON SUBMISSION OF A BUILDING PERMIT APPLICATION.

ISSUE LOG

No.	Date	Description

PROFESSIONAL SEALS:

SHEET TITLE:

Title Sheet

SHEET INFORMATION:

JOB No.	Date Issued: 05/08/20
Drawn By:	Sheet Number:
Checked By:	**A-003**
QC Review:	
Phase:	

ADDITION OPTION

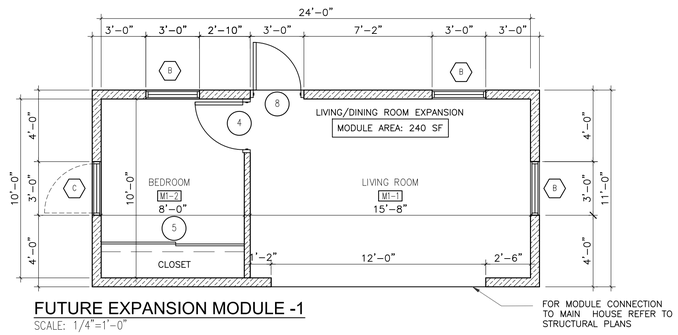

FUTURE EXPANSION MODULE -1

SCALE: 1/4"=1'-0"

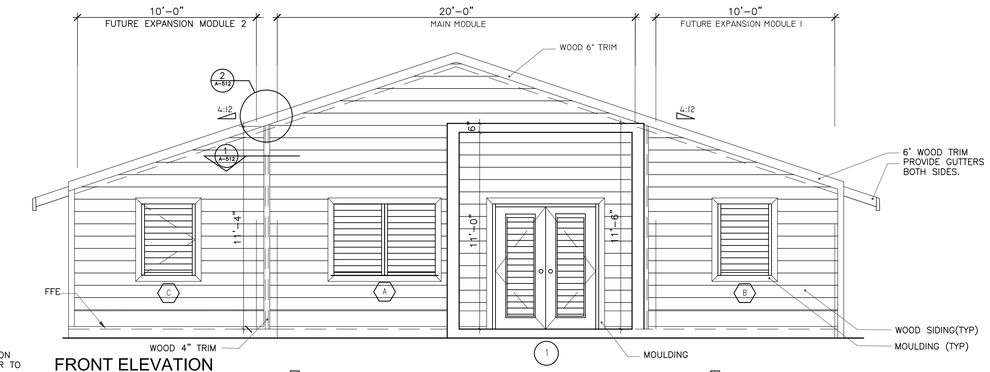

FRONT ELEVATION

SCALE: 1/4"=1'-0"

MAIN STRUCTURE

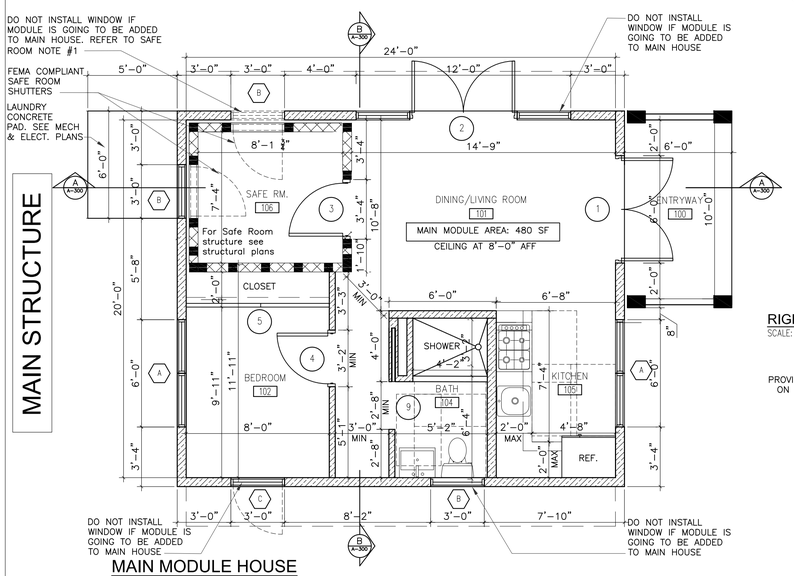

MAIN MODULE HOUSE

SCALE: 1/4"=1'-0"

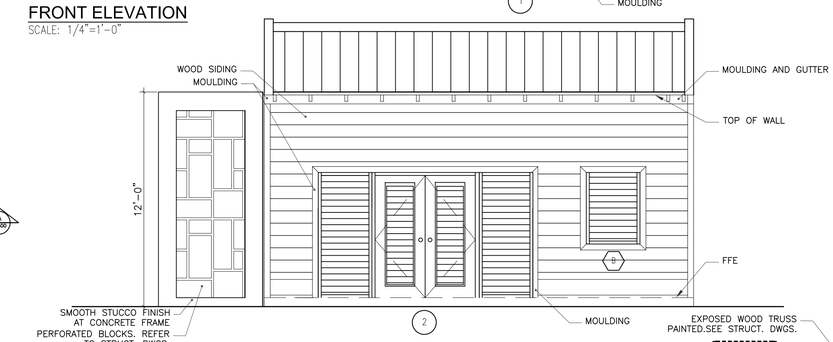

RIGHT SIDE ELEVATION (WITHOUT MODULE 1)

SCALE: 1/4"=1'-0"

WOOD HOUSE ROOFING OPTIONS:
1. LIQUID APPLIED MEMBRANE
2. STANDING SEAM
3. GALVANIZED CORRUGATED PANELS

OWNER SHALL DECIDE WHAT SYSTEM TO BE USED IN THE WOOD CEILING. INSTALLATION TO BE AS PER MANUFACTURERS' INSTRUCTIONS.

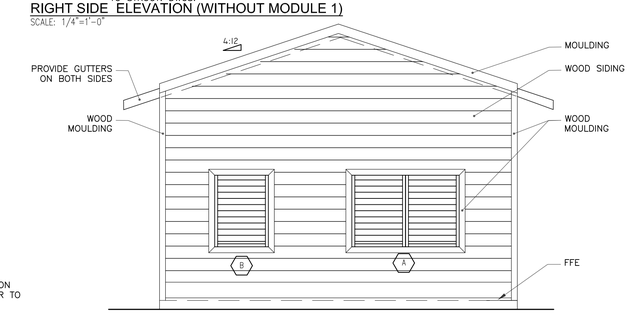

REAR ELEVATION (WITHOUT MODULES)

SCALE: 1/4"=1'-0"

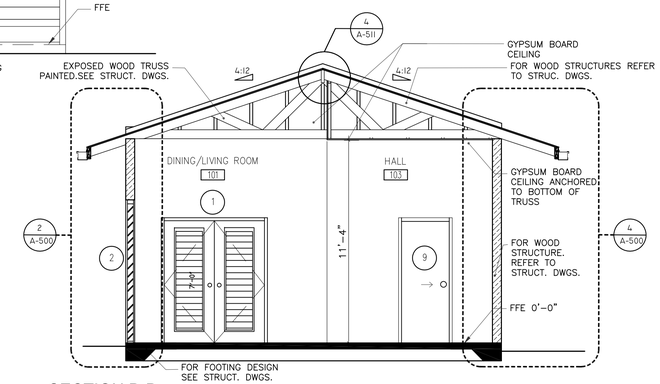

SECTION B-B

SCALE: 1/4"=1'-0"

ADDITION OPTION

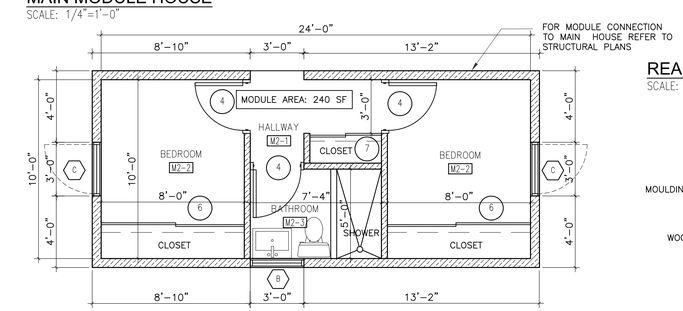

FUTURE EXPANSION MODULE - 2

SCALE: 1/4"=1'-0"

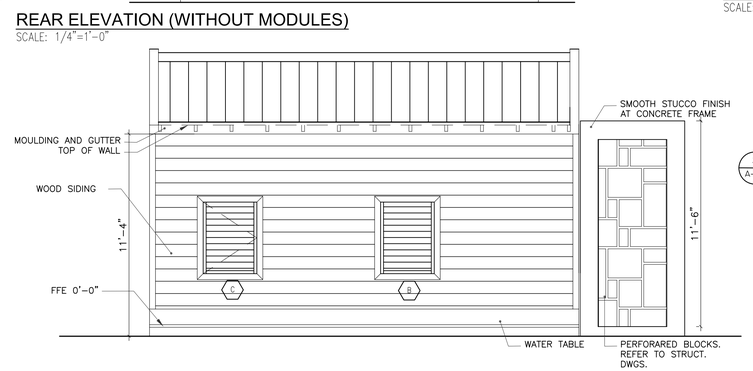

LEFT SIDE ELEVATION (WITHOUT MODULE 2)

SCALE: 1/4"=1'-0"

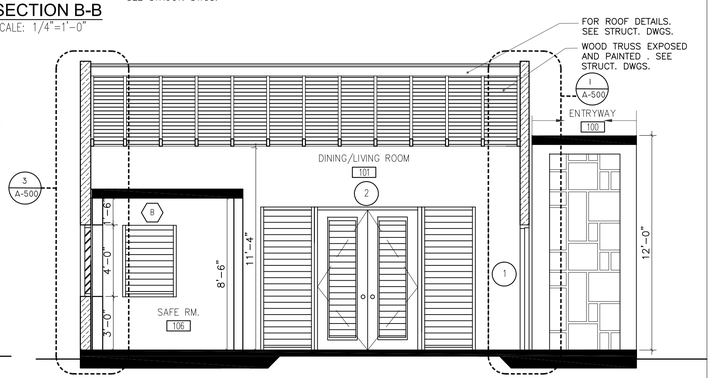

SECTION A-A

SCALE: 1/4"=1'-0"

LEGEND:

- CONCRETE
- STRUCTURAL WOOD WALL
- SOLID GROUTED MASONRY WALLS (SAFE ROOM. SEE STRUCTURAL PLANS)

0' 5' 10'

NOTE: FOR STRUCTURE DESIGN, FOOTINGS AND WALLS DESCRIPTION SEE STRUCTURAL PLANS

CONSULTANT:

CLIENT:

PROJECT NAME:

ONE STORY WOOD HOME

NOTE: PRIOR TO CONSTRUCTION CONTACT PUERTO RICO DEPARTMENT OF ECONOMIC DEVELOPMENT AND COMMERCE (DDEC), PERMITS MANAGEMENT OFFICE (OGPe-DDEC) FOR BUILDING REQUIREMENTS IN PUERTO RICO. THIS INFORMATION HAS BEEN DEVELOPED FOR THE USE OF PUERTO RICO RESIDENTS AND IS BELIEVED TO MEET THE PUERTO RICO BUILDING CODE. ALL DRAWINGS MUST BE SEPARATELY APPROVED BY DDEC, PERMITS MANAGEMENT OFFICE UPON SUBMISSION OF A BUILDING PERMIT APPLICATION.

ISSUE LOG

No.	Date	Description

PROFESSIONAL SEALS:

SHEET TITLE:

PROTOTYPE 3 - FLOOR PLANS,SECTIONS & ELEVATIONS

SHEET INFORMATION:

JOB No.	Date Issued: 05/08/20
Drawn By:	Sheet Number:
Checked By:	A-300
QC Review:	
Phase:	

FINISH SCHEDULE MAIN MODULE

NO.	NAME	FLOOR	BASE	CEILING	WALL
100	BALCONY	F1	B1	C1	W1
101	LIVING/DINING ROOM	F1	B1	C3	W1
102	BEDROOM	F1	B1	C2	W1
103	HALL	F1	B1	C2	W1
104	BATHROOM	F1, F2	B1	C2	W1,W2
105	KITCHEN	F1	B1	C2	W1
106	SAFE ROOM	F1		C1	W1

FINISH SCHEDULE MODULES 1&2

NO.	NAME	FLOOR	BASE	CEILING	WALL
M1-1	LIVING ROOM	F1		C3	W1
M1-2	BEDROOM	F1		C2	W1
M2-1	HALLWAY	F1		C2	W1
M2-2	BEDROOM	F1		C2	W1
M2-3	BATHROOM	F1, F2		C2	W1,W2

FINISHES KEYNOTES

FLOOR FINISHES:
F1 – Polished concrete with satin sealer
F2 – Shower floor and 4" high shower curb to be mosaic ceramic tile, 2x2, color white, grout silver color.

BASE:
B1 – Vinyl Base, color Gray

CEILING:
C1 – Concrete, smooth plaster painted white
C2 – Gypsum board, firecode, $\frac{1}{2}$ OR $\frac{5}{8}$"
C3 – Exposed wood trusses painted white

WALLS:
W1 – Concrete, smooth plaster painted white
W2 – Ceramic tile wainscot, 4"x4", color white with silver grout at shower walls (3), to 72" high

FINISHES NOTES

1. All floor finishes must be level and smooth
2. Contractor must consult with the Owner for any material changes from the specified in the contract documents.
3. When required by Owner, Contractor must submit one sample of the finishes to the Owner for approval. Sample must conform with the specifications in the contract documents and colors selected by the Owner.
4. Whenever a color is not selected or indicated in the contract documents, it must be consulted with the Owner for selection.
5. Interior Walls paints shall be equal or similar to Behr Premium Plus Ultra (paint and primer) in eggshell finish, white, unless otherwise indicated by the Owner. Personal Colors to be selected by the Owner.
6. Ceiling paint to be equal or similar to Behr Premium Plus Ultra Stain Blocking Ceiling Paint in white, unless otherwise indicated by the Owner.
7. Exterior paint to be equal or similar to Behr Premium Plus Ultra Exterior Flat Enamel, color white unless otherwise indicated by the Owner. Personal Colors to be selected by Owner.
8. Bathrooms wall and floor finishes to be selected and provided by the contractor, unless otherwise indicated by the Owner.
9. Kitchen finishes to be selected by the Owner. Kitchen design and construction shop drawings to be provided by Others to the Owner. Contractor must coordinate with Kitchen supplier. Kitchen supplier must verify all the dimensions prior to the start of the kitchen cabinetry construction. Contractor shall be responsible for any discrepancies in the dimensions not verified by the supplier.
10. Contractor must verify on field all the finishes quantities and areas before the material is purchased. Contractor must provide the exact quantities to the Owner so he can get quotes on the material finishes if required.
11. Closets to have one metal shelf and a clothes rod installed on its interior.
12. Gypsum board ceilings to be $\frac{1}{2}$" or $\frac{5}{8}$" Firecode panel by USG. Install on the bottom of the trusses.
13. Paint wood exterior walls white. Submit exterior wood quality paint type to Architect for approval.

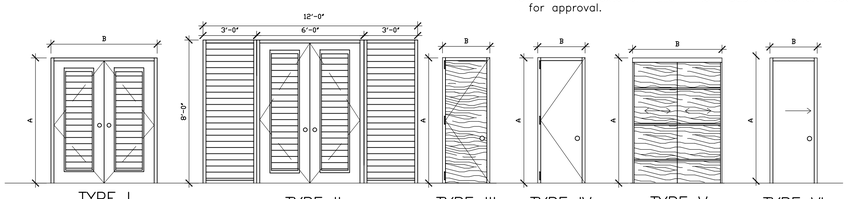

DOOR ELEVATIONS

DOOR SCHEDULE PROTOTYPE 3

MAIN BLDG QTY.	MOD. 1 QTY.	MOD. 2 QTY.	NO.	TYPE	DIMENSIONS (D.O.) A	DIMENSIONS (D.O.) B	MATERIAL	DESCRIPTION	REMARKS
1			1	I	7'-0"	6'-0"	ALUMINUM	JALOUSIE WINDOW DOOR	HARDWARE BY MANUFACTURER (ENTRANCE) COLOR: GRAY, FRAME: ALUM.
1			1	II	7'-0"	12'-0"	ALUMINUM	JALOUSIE WINDOW DOOR & JALOUSIE WINDOW	STOREFRONT; DOOR 6' X 8' H. HARDWARE BY MANUFACTURER (ENTRANCE)
1			2	IV	7'-0"	3'-4"	HOLLOW METAL	FIXED	SAFETY ROOM DOOR HARDWARE BY MANUFACTURER (COLOR GRAY)
1	1	3	4	III	7'-0"	3'-0"	WOOD & WOOD FRAME	FLUSH DOOR SEMI-SOLID	HARDWARE: PRIVACY WOOD: CEDAR, PAINT GRAY
1	1		5	V	8'-0"	8'-9 1/4"	WOOD	FLUSH SLIDING BYPASS CL. DOOR	HARDWARE: JOHNSON HARDWARE 200SD COLOR: GRAY PAINT, LOCATION:ROOM MT-2 & ROOM 102
		2	5	V	8'-0"	7'-8 3/8"	WOOD	FLUSH SLIDING BYPASS CL. DOOR	HARDWARE: JOHNSON HARDWARE 200SD COLOR: GRAY PAINT
		1	7	V	8'-0"	5'-2 5/8"	WOOD	FLUSH SLIDING BYPASS CL. DOOR	HARDWARE: JOHNSON HARDWARE 200SD COLOR: GRAY PAINT
		1	8	V	8'-0"	3'-0"	ALUMINUM	FLUSH DOOR	SECURITY ENTRANCE DOOR HARDWARE BY MANUFACTURER (COLOR GRAY)
		1	9	VI	7'-0"	3'-0"	WOOD & WOOD FRAME	POCKET DOOR SEMI-SOLID	HARDWARE: PRIVACY WOOD: CEDAR, PAINT GRAY

1. Install doors as per the FMA/AMMA 200 and 400 guidelines.

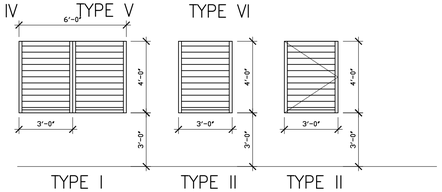

WINDOW ELEVATIONS

WINDOW SCHEDULE PROTOTYPE 3

MAIN BLDG QTY.	MOD. 1 QTY.	MOD. 2 QTY.	NO.	TYPE	DIMENSIONS A	DIMENSIONS B	MATERIAL	A.F.F. (C)	REMARKS
2			A	I	4'-0"	6'-0"	ALUMINUM JALOUSIE	3'-0"	COLOR: GRAY JALOUSIE: 4", ADD ALUM. SCREEN
3	3	1	B	II	4'-0"	3'-0"	ALUMINUM JALOUSIE	3'-0"	COLOR: GRAY JALOUSIE: 4", ADD ALUM. SCREEN
1	1	2	C	III	4'-0"	3'-0"	ALUMINUM JALOUSIE	3'-0"	COLOR: GRAY JALOUSIE: 4", ADD ALUM. SCREEN

1. Window waterproofing: Provide 100% Silicone caulking around the interior and exterior perimeter of each window, eq. or similar to Sikaflex 211. Install as per the FMA/AMMA 200 and 400 guidelines.
2. For safe room window requirements, see structural drawings.

GYPSUM BOARD NOTES:

1. Provide Type X gypsum wallboard, 5/8" in thickness ("5/8" type X wallboard"), is manufactured for use as one component of an assembly/system (such as a wall) where a fire resistance rating is required in a residential, structure by the applicable building code.
2. 5/8" type X wallboard is required to be manufactured in accordance with established ASTM standards defining type X wallboard as that which provides not less than one-hour fire resistance when tested in specified building assemblies/systems in a laboratory setting under certain controlled conditions and pursuant to certain ASTM procedures

BATHROOM SCHEDULE

BATHROOM EQUIPMENT:
Water Closet: Cadet 3 FloWise Tall Height 2-Piece 1.28 GPF Single Flush High Efficiency Elongated Toilet in White with Slow Close Seat by American Standard
Lavatory sink: Elmbrook 24 in. Pedestal Sink in White with 4 in. Centerset Faucet Holes by Kohler
Lavatory faucet: Elmbrook 4 in. Centerset 2-Handle Bathroom Faucet in Polished Chrome by Kohler
Lavatory mirror: 20 in. x 26 in. Recessed or Surface-Mount Bathroom Medicine Cabinet with Beveled Mirror in Silver by Pegasus
Accessories: Serano 5-Piece Bathroom Accessory Set in Chrome by Kingston Brass
Shower: Centa 47 in. 1 Jet Shower Panel with Hand Shower in Stainless Steel by Mediterraneo
Shower drain: PVC Shower Drain with Chrome Barrel and Square 4-3/16 in. Chrome Strainer by Oatey
Shower curtain rod: Expanse Wall Mount Shower Rod in Brushed Stainless by Kohler

BATHROOM NOTES:
1. Bathroom equipment and accessories to be equal or similar to the specified above. Variations to be submitted to the Owner for approval.
2. Bathroom equipment and accesories supplier: eq. or sim. The Home Depot
3. Bathroom walls to be painted white (eggshell finish).
4. For bathroom wainscot and shower tiles see finish schedule.
5. For potable water cistern and rain water cistern details see mechanical plans.

KITCHEN SCHEDULE

KITCHEN EQUIPMENT:
Sink: Handcrafted All-in-One Drop-In Stainless Steel 25 in. x 22 in. x 9 in. Single Bowl Kitchen Sink with Tray and Drain by Akdy
Sink Faucet: Fairbury Single-Handle Pull-Down Sprayer Kitchen Faucet in Stainless Steel by American Standard
Cabinets: Wood cabinets, laminated by others. Submit shop drawings to architect for approval.
Cooking range: N.I.C.
Refrigerator: N.I.C.
Kitchen Hood: RL6200 Series 30 in. Ductless Under Cabinet Range Hood with Light in Stainless Steel by NuTone

KITCHEN NOTES:
1. Kitchen equipment and accessories to be equal or similar to the specified above. Variations to be submitted to the Owner for approval.
2. Kitchen equipment and accesories supplier: eq. or sim. to The Home Depot
3. Kitchen walls to be painted white (eggshell finish).
4. Kitchen backsplash tiles: Ceramic tiles 6x6, color gray. Submit to Owner for approval

SAFE ROOM NOTES

SAFE ROOM SIZE SHOWN IN THIS PLAN SET IS BASED UPON A 7 PERSON OCCUPANCY, PER FEMA P-320 REQUIREMENTS 7 S.F. OF SPACE IS REQUIRED PER OCCCUPANT. FOR VARYING OCCUPANCY REQUIREMENTS CONFIRM SAFE ROOM SIZE REQUIREMENTS WITH FEMA P-320, FEMA 361, AND ICC 500.

SEE FEMA P-361 AND ICC-500 FOR ADDITIONAL SAFE ROOM REQUIREMENTS SUCH AS FIRST AID KITS, OPERATION, AND MAINTENANCE REQUIREMENTS. ONCE THE SAFE ROOM IS CONSTRUCTED IT SHOULD BE REGISTERED WITH LOCAL FIRST RESPONDERS (E.G., POLICE, FIRE, RESCUE ORGANIZATIONS).

NOT ALL SAFE ROOM OPENINGS ARE SHOWN IN THESE DRAWINGS. ESTABLISH AND VERIFY ALL OPENINGS AND INSERTS FOR MECHANICAL, PLUMBING, AND ELECTRICAL WITH APPROPRIATE TRADES, DRAWINGS, AND SUBCONTRACTORS PRIOR TO CONSTRUCTION. OPENINGS MAY REQUIRE ADDITIONAL REINFORCING OR SUPPORTS AS SHOWN ON TYPICAL DETAILS. OPENINGS NEED TO BE PROTECTED PER ICC 500.

COMPLETE SAFE ROOM INSPECTION REQUIREMENTS SHALL BE AS DIRECTED BY THE LOCAL BUILDING DEPARTMENT.

SAFE ROOM VENTILATION IS TO BE PROVIDED. VERIFY SIZE REQUIREMENTS BASED ON SAFE ROOM SIZE, OCCUPANCY, AND ICC 500 SPECIFICATIONS. CONSULT LOCAL BUILDING OFFICIAL AND REFER TO ICC 500-14 FOR VENTILATION OPENING PROTECTION.

THE SELECTED DOOR AND WINDOW PROTECTION SHALL MEET THE DESIGN CRITERIA OF 2015 FEMA P-361 AND 2014 ICC-500. ALL DOORS AND WINDOW PROTECTIONS SHALL BE A TESTED ASSEMBLY AND INSTALLED PER MANUFACTURES RECOMMENDATIONS.

(1) OWNER HAS THE OPTION TO ELIMINATE SAFE ROOM WINDOW IF THIS ROOM WILL NEVER BE USED AS A BEDROOM.

GENERAL NOTES

1. ALL WORK SHALL BE DONE IN STRICT ACCORDANCE WITH ALL APPLICABLE LOCAL, STATE, AND FEDERAL BUILDING CODES AND/OR REGULATIONS.
2. ALL WORK SHALL BE DONE IN A MANNER CONSISTENT WITH THE HIGHEST STANDARDS OF THE RESPECTIVE TRADES.
3. THE CONTRACTOR SHALL VISIT THE SITE AND BECOME FAMILIAR WITH THE EXISTING CONDITIONS BEFORE BIDDING.
4. THE CONTRACTOR SHALL VERIFY ALL FIELD DIMENSIONS BEFORE PROCEEDING WITH THE WORK AND COMPLIANCE WITH ZONING REGULATIONS.
5. THE CONTRACTOR SHALL ABIDE BY ALL REQUIREMENTS OF THE OWNER WITH RESPECT TO CONSTRUCTION SCHEDULING, COORDINATION, TEMPORARY CONSTRUCTION, UTILITIES, ETC.
6. THE CONTRACTOR SHALL NOT SCALE THESE CONSTRUCTION DOCUMENTS. IN THE EVENT THAT THE CONTRACTOR DOES SCALE THESE DOCUMENTS, IT SHALL BE AT THEIR OWN RISK.
7. ALL MATERIALS, PRODUCTS, AND UNITS, SHALL BE INSTALLED PER MANUFACTURER'S RECOMMENDATIONS AND INSTRUCTIONS.
8. INSTALLATION OF ALL MATERIALS AND/OR UNITS TO BE SELECTED BY, SUPPLIED BY, AND/OR INSTALLED BY THE OWNER SHALL BE SCHEDULED AND COORDINATED BY THE CONTRACTOR TO MAINTAIN THE CONSTRUCTION SCHEDULE. PRIOR TO THE COMMENCEMENT OF THE WORK, THE CONTRACTOR SHALL NOTIFY THE OWNER OF ALL QUANTITIES OF OWNER SUPPLIED MATERIALS AND/OR UNITS NOT SPECIFICALLY CALLED OUT IN THESE CONSTRUCTION DOCUMENTS. THE CONTRACTOR SHALL NOTIFY THE OWNER OF REQUIRED DELIVERY DATES OF OWNER SUPPLIED MATERIALS AND UNITS.
9. ALL FINISH PAINT SHALL BE APPLIED OVER A COMPATIBLE FACTORY OR FIELD APPLIED PRIMER.
10. THE CONTRACTOR SHALL PROTECT ALL EXISTING AND ADJACENT AREAS AT ALL TIMES DURING CONSTRUCTION. ANY AREA DAMAGED OR AFFECTED BY CONSTRUCTION SHALL BE PATCHED, REPAIRED, OR REPLACED AS REQUIRED TO MATCH EXISTING OR ADJACENT AREAS AT THE CONTRACTOR'S EXPENSE.
11. THE CONTRACTOR SHALL YIELD TO THE OWNER AND THEIR VISITORS AT ALL TIMES.
12. THE CONTRACTOR SHALL NOT DISRUPT THE BUILDING OR OPERATIONS WITHOUT PRIOR SCHEDULING AND APPROVAL FROM THE OWNER.
13. NOT USED
14. IF A CONFLICT OCCURS ON THESE CONSTRUCTION DOCUMENTS AND/OR THE SPECIFICATIONS, THE CONTRACTOR SHALL BID THE HIGHER QUALITY AND/OR QUANTITY.
15. AIR CONDITIONING NOT INCLUDED. HOUSE OWNER SHALL DECIDE IF REQUIRED AND INSTALLATION WILL BE DONE BY OTHERS AFTER HOUSE IS BUILT.
16. ALL WORK THAT IS EITHER IMPLIED OR REASONABLY INFERRED BY THE CONTRACT DOCUMENTS, DRAWINGS, AND SPECIFICATIONS SHALL BE THE RESPONSIBILITY OF THE CONTRACTOR.
17. ALL DRAWINGS ARE DIRECTED TO THE ATTENTION OF THE CONTRACTOR, AND THE INCLUSION OF ANY WORK BY MENTION, NOTE, DETAIL, OR IMPLICATION, HOWEVER BRIEF, MEANS THAT THE CONTRACTOR SHALL PROVIDE AND INSTALL THE SAME.
18. ALL WORK PERFORMED SHALL INCLUDE ALL APPURTENANCES AND APPARATUS NORMALLY DEEMED TO BE PART OF A COMPLETE PACKAGE WITHIN THE DEFINITIONS OF NORMAL INDUSTRY STANDARDS.
19. ALL DIMENSIONS ARE CLEAR (FINISH TO FINISH). ALL FINAL DIMENSIONS AND LAYOUT SHALL BE VERIFIED WITH AND APPROVED BY THE OWNER AS REQUIRED BEFORE PROCEEDING WITH THE WORK.
20. ROOF WATERPROOFING TO BE LIQUID APPLIED MEMBRANE SYSTEM ON CONCRETE ROOFS, OR STANDING SEAM OR GALVANIZED CORRUGATED PANELS. ALL ROOFING DESIGNS BY OTHERS.
21. ONE BEDROOM WINDOW SHOULD BE CASEMENT TYPE JALOUSIE TO SWING IN THE DIRECTION OF EGRESS PER CODE
22. NOT USED
23. THE CONTRACTOR ASSUMES RESPONSIBILITY FOR CONSTRUCTION MEANS, METHODS, MATERIALS, TECHNIQUES, PROCEDURES, SEQUENCES, OR SCHEDULING IN CONNECTION WITH THIS WORK.
24. NOT USED
25. THE CONTRACTOR SHALL REMOVE ALL RUBBISH AND WASTE MATERIAL PERIODICALLY AND KEEP THE JOB SITE BROOM CLEAN AT ALL TIMES. ALL WASTE MATERIAL SHALL BE DISPOSED OF PROPERLY.
26. ALL MECHANICAL, ELECTRICAL, PLUMBING FIXTURES AND EQUIPMENT SHOWN IN THE ARCHITECTURAL CONSTRUCTION DOCUMENTS, ARE SHOWN FOR LOCATION PURPOSES ONLY. ALL SPECIFICATIONS, ETC. SHALL BE PROVIDED UNDER SEPARATE COVER.

CONSULTANT:

CLIENT:

PROJECT NAME:

ONE STORY WOOD HOME

NOTE: PRIOR TO CONSTRUCTION CONTACT PUERTO RICO DEPARTMENT OF ECONOMIC DEVELOPMENT AND COMMERCE (DDEC), PERMITS MANAGEMENT OFFICE (OGPe-DDEC) FOR BUILDING REQUIREMENTS IN PUERTO RICO. THIS INFORMATION HAS BEEN DEVELOPED FOR THE USE OF PUERTO RICO RESIDENTS AND IS BELIEVED TO MEET THE PUERTO RICO BUILDING CODE. ALL DRAWINGS MUST BE SEPARATELY APPROVED BY DDEC, PERMITS MANAGEMENT OFFICE UPON SUBMISSION OF A BUILDING PERMIT APPLICATION.

ISSUE LOG

No.	Date	Description

PROFESSIONAL SEALS:

SHEET TITLE:
PROTOTYPE 3 - DOORS, WINDOWS, NOTES AND FINISHES

SHEET INFORMATION:

JOB No.	Date Issued: 05/08/20
Drawn By:	Sheet Number:
Checked By:	A-301
QC Review:	
Phase:	

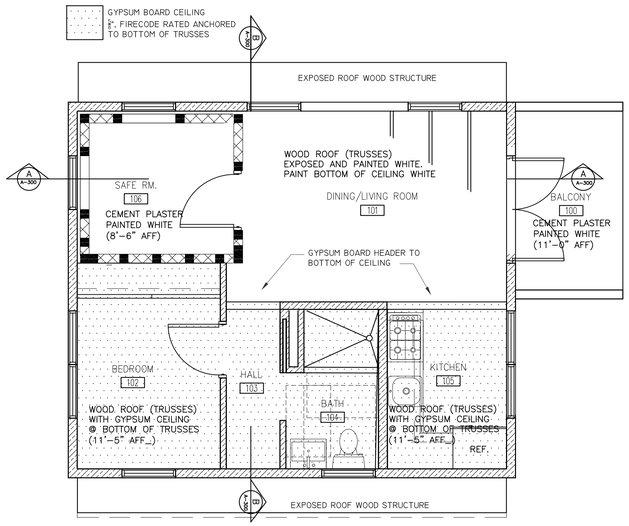

MAIN MODULE HOUSE REFLECTED CEILING PLAN
SCALE: 1/4"=1'-0"

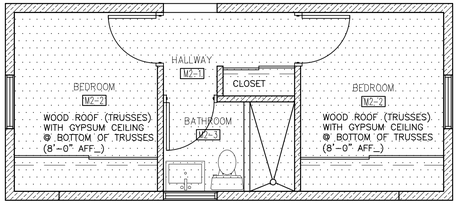

EXPANSION MODULE - 2 REFLECTED CEILING PLAN
SCALE: 1/4"=1'-0"

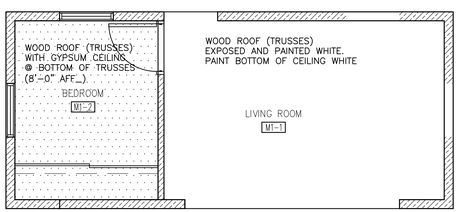

EXPANSION MODULE - 1 REFLECTED CEILING PLAN
SCALE: 1/4"=1'-0"

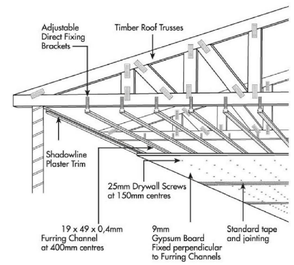

TYPICAL INSTALLATION DETAIL FOR GYPSUM BOARD CEILINGS ON WOOD TRUSSES
SCALE: NTS

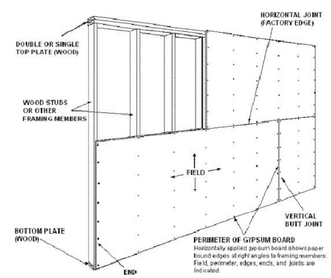

TYPICAL INSTALLATION DETAIL FOR GYPSUM BOARD ON WALLS WOOD STUDS
SCALE: NTS

CONSULTANT:

CLIENT:

PROJECT NAME:

ONE STORY WOOD HOME

NOTE: PRIOR TO CONSTRUCTION CONTACT PUERTO RICO DEPARTMENT OF ECONOMIC DEVELOPMENT AND COMMERCE (DDEC), PERMITS MANAGEMENT OFFICE (OGPe-DDEC) FOR BUILDING REQUIREMENTS IN PUERTO RICO. THIS INFORMATION HAS BEEN DEVELOPED FOR THE USE OF PUERTO RICO RESIDENTS AND IS BELIEVED TO MEET THE PUERTO RICO BUILDING CODE. ALL DRAWINGS MUST BE SEPARATELY APPROVED BY DDEC, PERMITS MANAGEMENT OFFICE UPON SUBMISSION OF A BUILDING PERMIT APPLICATION.

ISSUE LOG

No.	Date	Description

PROFESSIONAL SEALS:

SHEET TITLE:

PROTOTYPE 3 - REFLECTED CEILING PLAN

SHEET INFORMATION:

JOB No.	Date Issued: 05/08/20
Drawn By:	Sheet Number:
Checked By:	A-302
QC Review:	
Phase:	

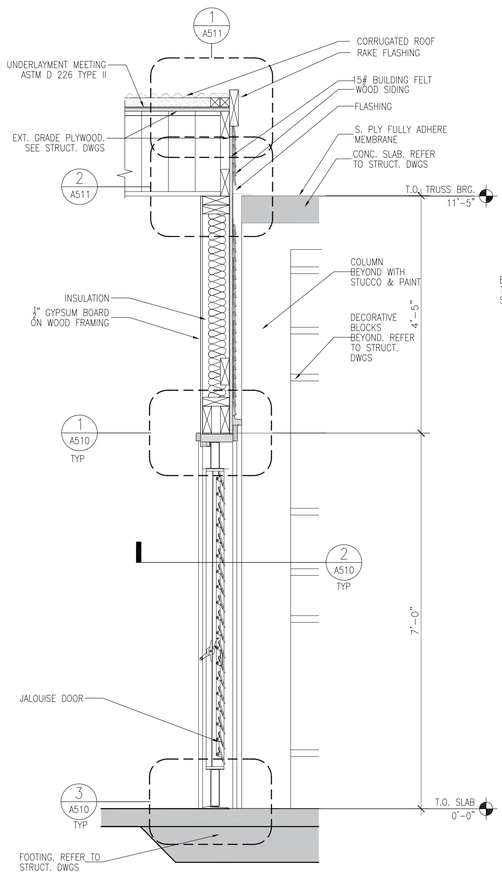

1 WALL SECTION
SCALE: 3/4" = 1'-0"

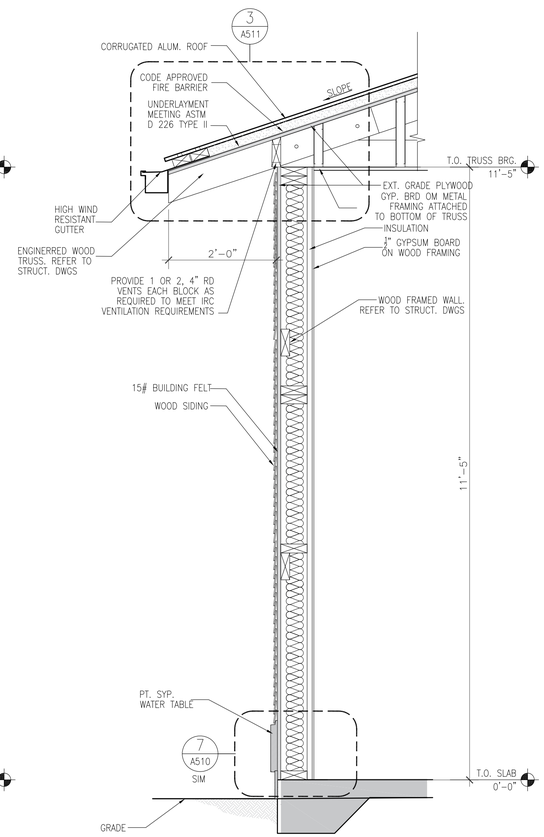

2 WALL SECTION
SCALE: 3/4" = 1'-0"

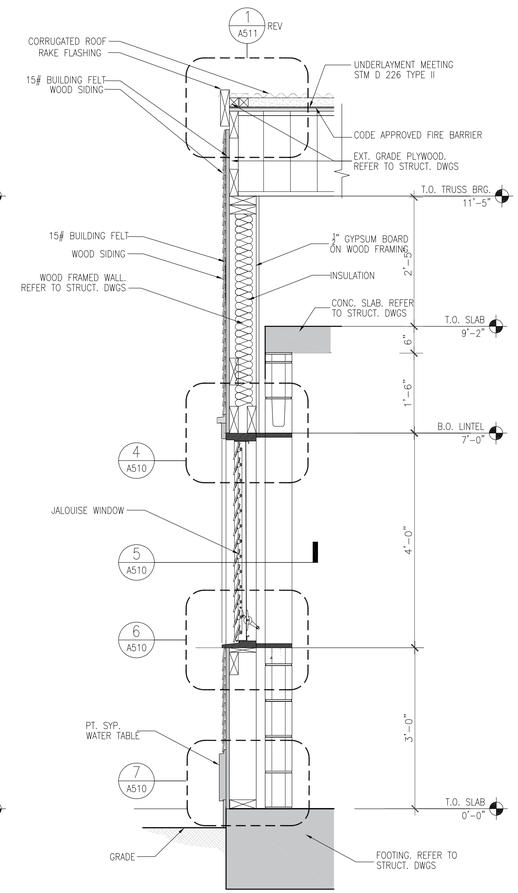

3 WALL SECTION
SCALE: 3/4" = 1'-0"

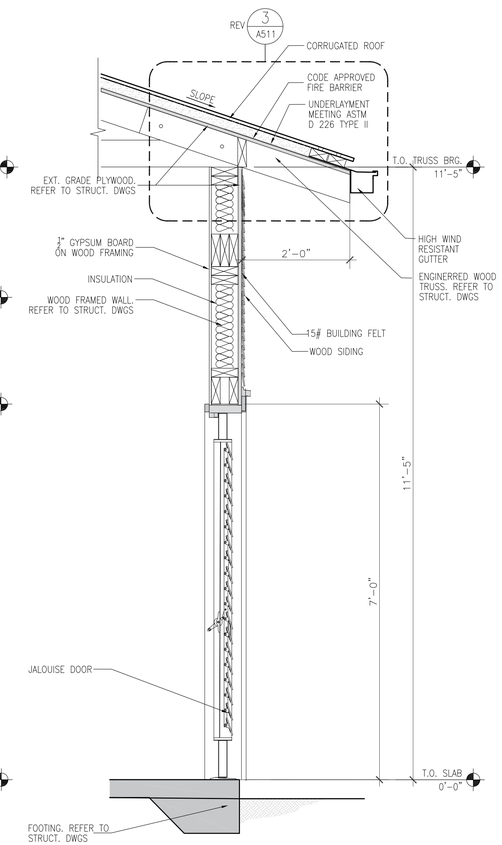

4 WALL SECTION
SCALE: 3/4" = 1'-0"

CONSULTANT:

CLIENT:

PROJECT NAME:

ONE STORY WOOD HOME

NOTE: PRIOR TO CONSTRUCTION CONTACT PUERTO RICO DEPARTMENT OF ECONOMIC DEVELOPMENT AND COMMERCE (DDEC), PERMITS MANAGEMENT OFFICE (OGPe-DDEC) FOR BUILDING REQUIREMENTS IN PUERTO RICO. THIS INFORMATION HAS BEEN DEVELOPED FOR THE USE OF PUERTO RICO RESIDENTS AND IS BELIEVED TO MEET THE PUERTO RICO BUILDING CODE. ALL DRAWINGS MUST BE SEPARATELY APPROVED BY DDEC, PERMITS MANAGEMENT OFFICE UPON SUBMISSION OF A BUILDING PERMIT APPLICATION.

ISSUE LOG

No.	Date	Description

PROFESSIONAL SEALS:

SHEET TITLE:

PROTOTYPE#3 WALL SECTIONS

SHEET INFORMATION:

JOB No.	Date Issued: 05/08/20
Drawn By:	Sheet Number:
Checked By:	**A-500**
QC Review:	
Phase:	

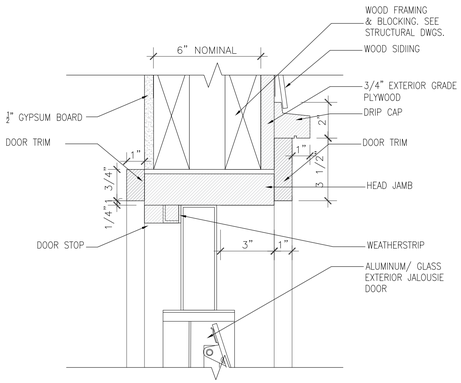

1 SECTION DETAIL–DOOR HEADER–WOOD WALL FRAME
SCALE: 3" = 1'–0"

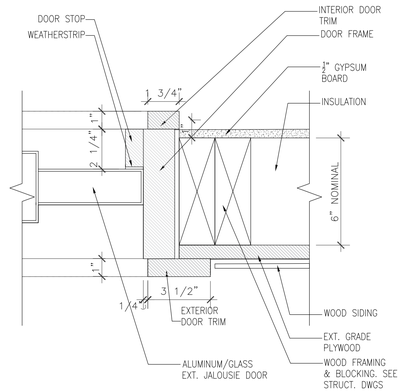

2 SECTION DETAIL–DOOR JAMB– WOOD WALL FRAME
SCALE: 3" = 1'–0"

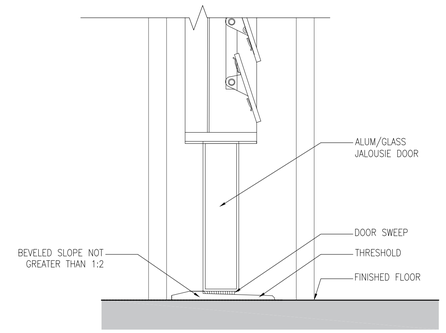

3 SECTION DETAIL–DOOR THRESHOLD –CONC. FLOOR
SCALE: 3" = 1'–0"

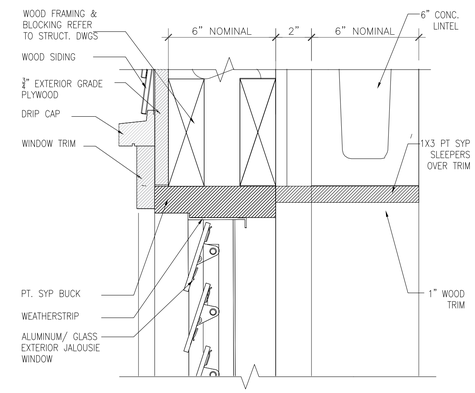

4 SECTION DETAIL–WINDOW HEADER–WOOD WALL FRAME
SCALE: 3" = 1'–0"

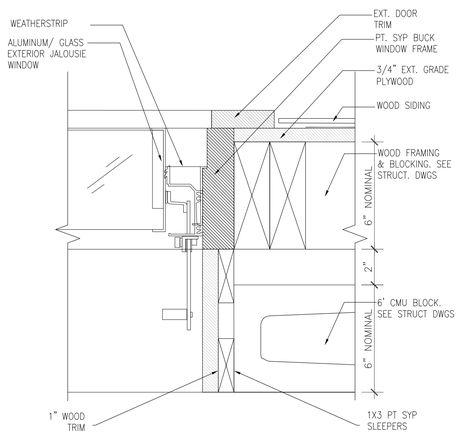

5 SECTION DETAIL–WINDOW JAMB–WOOD WALL FRAME
SCALE: 3" = 1'–0"

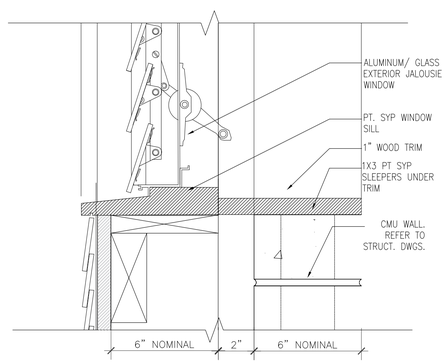

6 SECTION DETAIL–WINDOW SILL–WOOD WALL FRAME
SCALE: 3" = 1'–0"

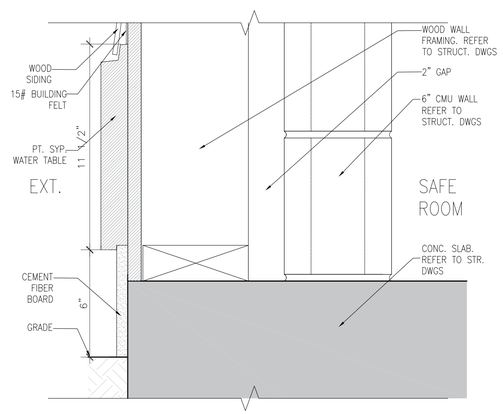

7 SECTION DETAIL–WOOD FRAMED WALL AT GRADE
SCALE: 3" = 1'–0"

CONSULTANT:

CLIENT:

PROJECT NAME:

ONE STORY WOOD HOME

NOTE: PRIOR TO CONSTRUCTION CONTACT PUERTO RICO DEPARTMENT OF ECONOMIC DEVELOPMENT AND COMMERCE (DDEC), PERMITS MANAGEMENT OFFICE (OGPe-DDEC) FOR BUILDING REQUIREMENTS IN PUERTO RICO. THIS INFORMATION HAS BEEN DEVELOPED FOR THE USE OF PUERTO RICO RESIDENTS AND IS BELIEVED TO MEET THE PUERTO RICO BUILDING CODE. ALL DRAWINGS MUST BE SEPARATELY APPROVED BY DDEC, PERMITS MANAGEMENT OFFICE UPON SUBMISSION OF A BUILDING PERMIT APPLICATION.

ISSUE LOG

No.	Date	Description

PROFESSIONAL SEALS:

SHEET TITLE:

PROTOTYPE #3-DETAILS DOORS AND WINDOWS

SHEET INFORMATION:

JOB No.	Date Issued: 05/08/20
Drawn By:	Sheet Number:
Checked By:	A-510
QC Review:	
Phase:	

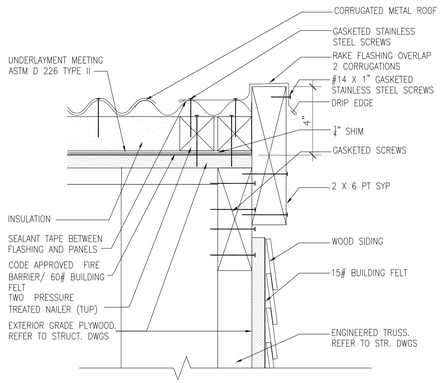

1 SECTION DETAIL–RAKE–WOOD/ CORRUGATED METAL ROOF
SCALE: 3" = 1'–0"

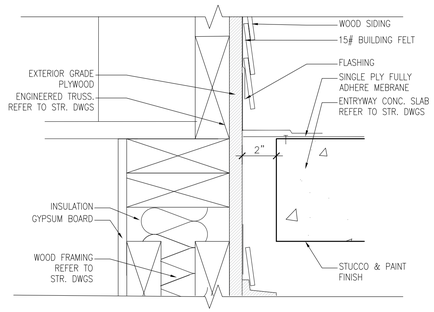

2 SECTION DETAIL–WOOD WALL / CONC. ROOF JOINT
SCALE: 3" = 1'–0"

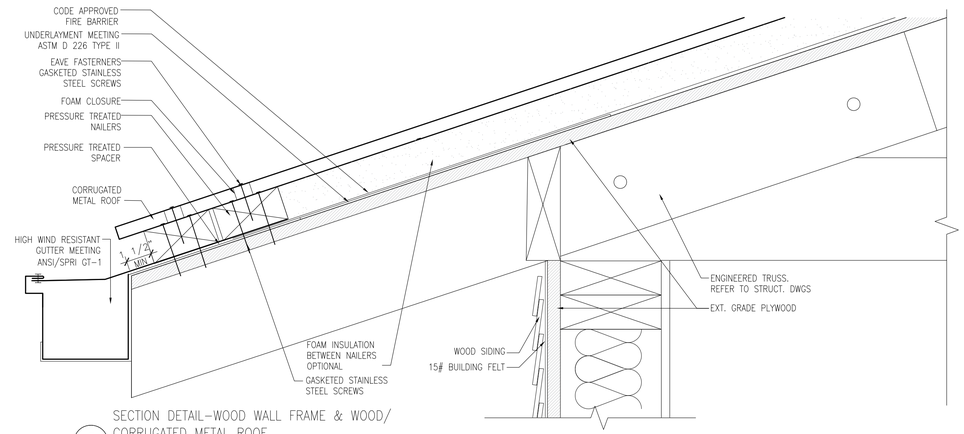

3 SECTION DETAIL–WOOD WALL FRAME & WOOD/ CORRUGATED METAL ROOF
SCALE: 3" = 1'–0"

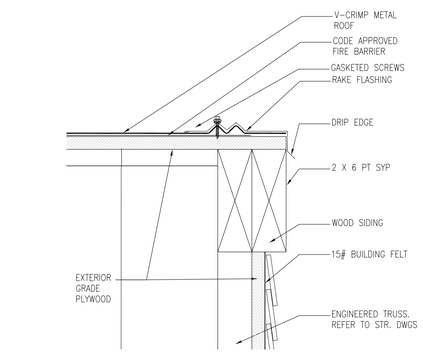

ALT 1 SECTION DETAIL–RAKE–WOOD/ V–CRIMP METAL ROOF
SCALE: 3" = 1'–0"

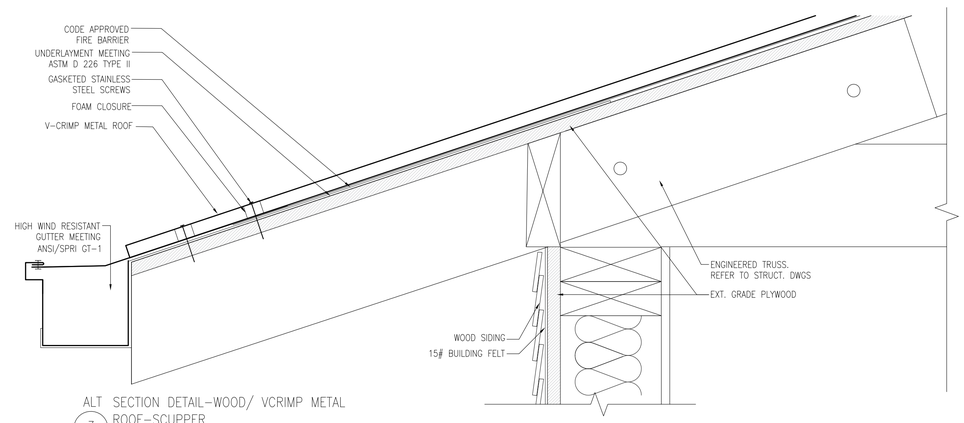

ALT 3 SECTION DETAIL–WOOD/ VCRIMP METAL ROOF–SCUPPER
SCALE: 3" = 1'–0"

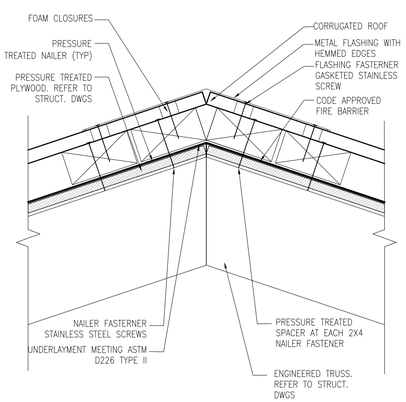

4 SECTION DETAIL AT ROOF RIDGE–CORRUGATED METAL ROOF
SCALE: 3" = 1'–0"

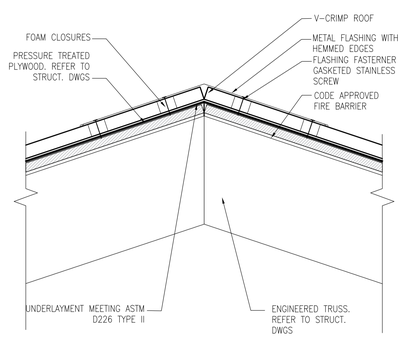

ALT 4 SECTION DETAIL AT ROOF RIDGE–V–CRIMP METAL ROOF
SCALE: 3" = 1'–0"

CONSULTANT:

CLIENT:

PROJECT NAME:

ONE STORY WOOD HOME

NOTE: PRIOR TO CONSTRUCTION CONTACT PUERTO RICO DEPARTMENT OF ECONOMIC DEVELOPMENT AND COMMERCE (DDEC), PERMITS MANAGEMENT OFFICE (OGPe-DDEC) FOR BUILDING REQUIREMENTS IN PUERTO RICO. THIS INFORMATION HAS BEEN DEVELOPED FOR THE USE OF PUERTO RICO RESIDENTS AND IS BELIEVED TO MEET THE PUERTO RICO BUILDING CODE. ALL DRAWINGS MUST BE SEPARATELY APPROVED BY DDEC, PERMITS MANAGEMENT OFFICE UPON SUBMISSION OF A BUILDING PERMIT APPLICATION.

ISSUE LOG

No.	Date	Description

PROFESSIONAL SEALS:

SHEET TITLE:

PROTOTYPE #3 ROOF DETAILS

SHEET INFORMATION:

JOB No.	Date Issued: 05/08/20
Drawn By:	Sheet Number:
Checked By:	**A-511**
QC Review:	
Phase:	

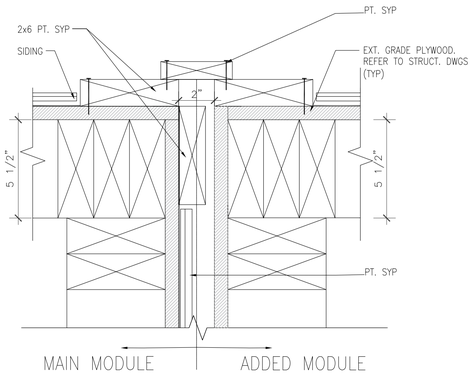

1 SECTION DETAIL–MAIN AND NEW MODULE JOINT
WOOD FRAMED WALLS
SCALE: 3" = 1'–0"

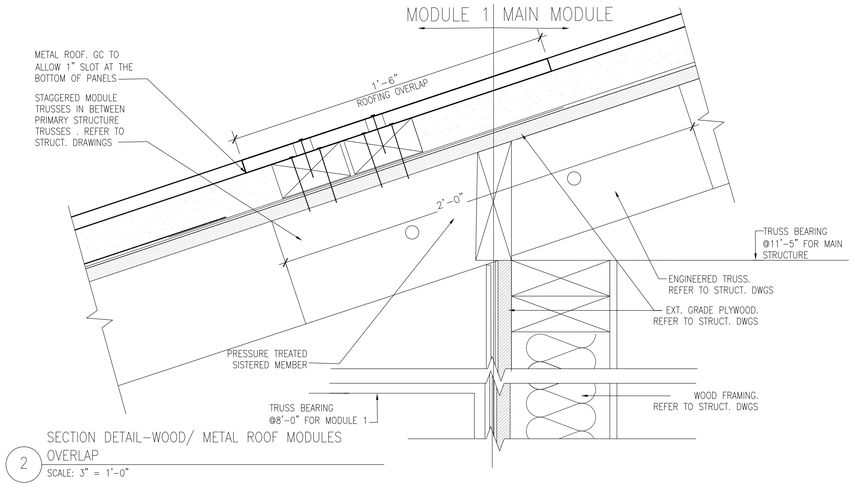

2 SECTION DETAIL–WOOD/ METAL ROOF MODULES
OVERLAP
SCALE: 3" = 1'–0"

CONSULTANT:

CLIENT:

PROJECT NAME:

ONE STORY WOOD HOME

NOTE: PRIOR TO CONSTRUCTION CONTACT PUERTO RICO DEPARTMENT OF ECONOMIC DEVELOPMENT AND COMMERCE (DDEC), PERMITS MANAGEMENT OFFICE (OGPe-DDEC) FOR BUILDING REQUIREMENTS IN PUERTO RICO. THIS INFORMATION HAS BEEN DEVELOPED FOR THE USE OF PUERTO RICO RESIDENTS AND IS BELIEVED TO MEET THE PUERTO RICO BUILDING CODE. ALL DRAWINGS MUST BE SEPARATELY APPROVED BY DDEC, PERMITS MANAGEMENT OFFICE UPON SUBMISSION OF A BUILDING PERMIT APPLICATION.

ISSUE LOG

No.	Date	Description

PROFESSIONAL SEALS:

SHEET TITLE:

PROTOTYPE #3
MODULES JOINT DETAILS

SHEET INFORMATION:

JOB No.	Date Issued: 05/08/20
Drawn By:	Sheet Number:
Checked By:	A-512
QC Review:	
Phase:	

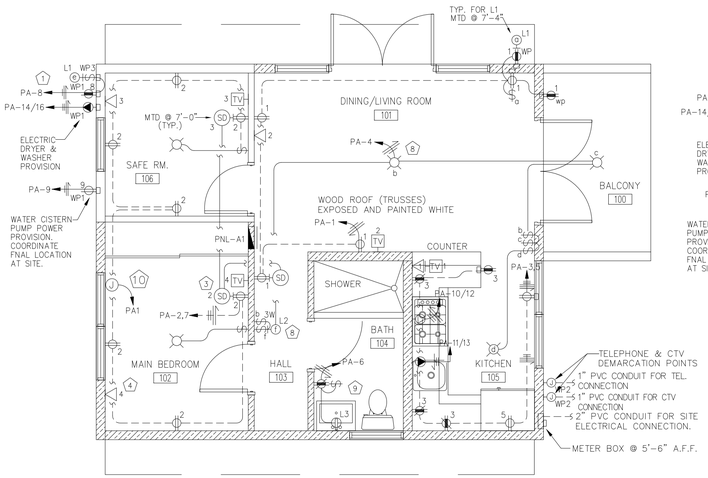

MAIN MODULE HOUSE
SCALE: 1/4"=1'-0"

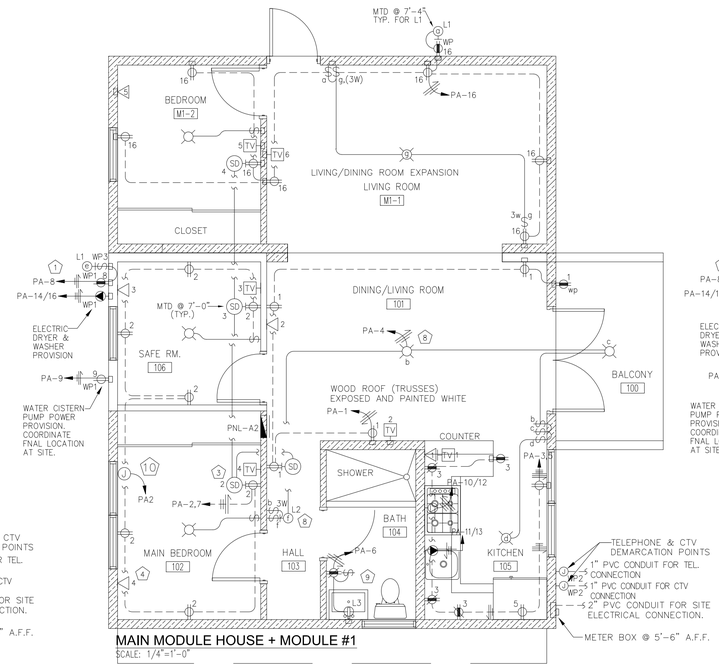

MAIN MODULE HOUSE + MODULE #1
SCALE: 1/4"=1'-0"

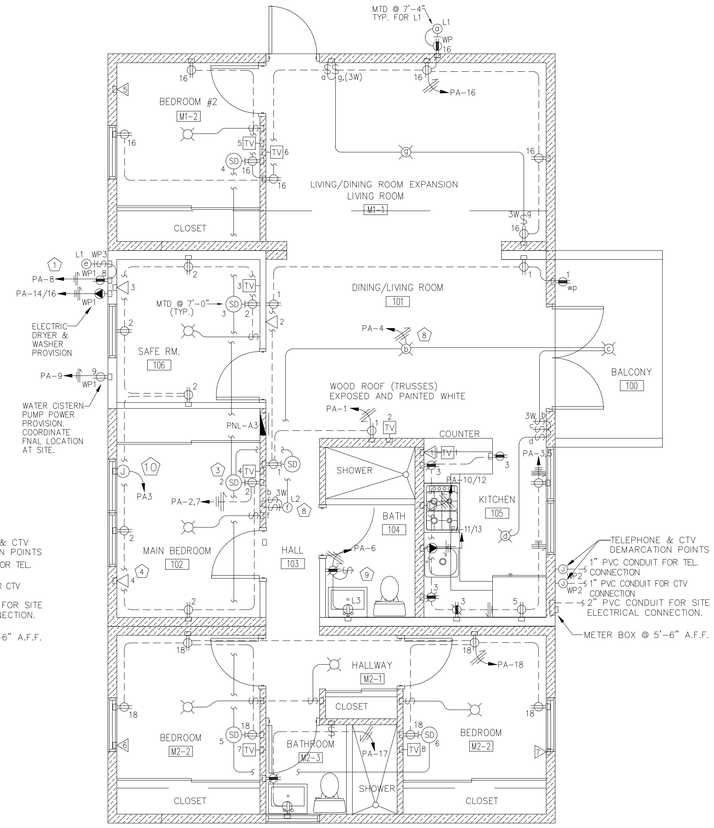

MAIN MODULE HOUSE + MODULES #1 & #2
SCALE: 1/4"=1'-0"

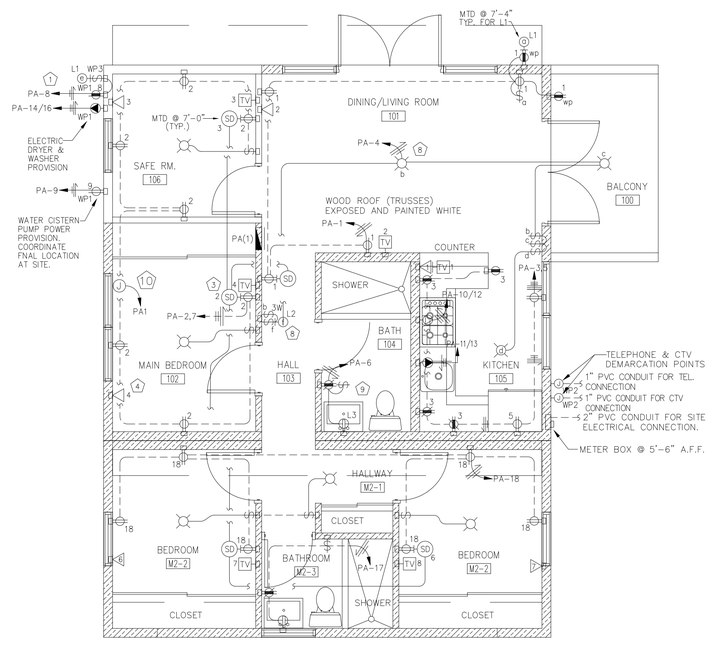

MAIN MODULE HOUSE + MODULE #2
SCALE: 1/4"=1'-0"

NOTES:

1. WASHER AND DRYER AREA RECEPTACLES LOCATED @ 48" A.F.F. (COORDINATE FINAL LOCATION WITH FIELD ENGINEER.)
2. NOT USED
3. ALL DETECTORS MUST BE CONNECTED BETWEEN EACH OTHER FOR PARALLEL ACTIVATION.
4. COORDINATE WITH ARCHITECT OR FIELD ENGINEER THE FINAL LOCATION FOR ALL TELEPHONE AND CTV OUTLETS (TYPICAL).
5. VANITY LIGHTS OUTLETS. COORDINATE FINAL HEIGHT WITH ARCHITECT.
6. COORDINATE WITH ARCHITECT OR FIELD ENGINEER THE FINAL HEIGHT FOR LIGHTING FIXTURE.
7. NOT USED
8. ALL INDOOR & OUTDOOR LIGHTING FIXTURES ARE TO BE PORCELAIN LAMP HOLDERS WITH 26 WATTS FLUORESCENT BULBS OR LED EQUIVALENTS.
9. INTERLOCK FAN WITH BATHROOM LIGHTING SWITCH. COORDINATED WITH MECHANICAL DWGS. WHEN APPLICABLE.
10. 4"X4" JUNCTION BOX FOR A/C UNIT DEDICATED RECEPTACLE. INSTALL EMPTY CONDUIT UP TO PANEL BOARD PA. RECEPTACLE, WIRING AND BREAKER (N.I.C.).

SPECIAL NOTES:

1. ALL EXPOSED CONDUITS INSTALLED INDOORS MUST BE EMT. NO PVC CONDUIT SHOULD BE INSTALLED EXPOSED INDOORS.

NOT FOR CONSTRUCTION

CONSULTANT:

CLIENT:

PROJECT NAME:

ONE STORY WOOD HOME

NOTE: PRIOR TO CONSTRUCTION CONTACT PUERTO RICO DEPARTMENT OF ECONOMIC DEVELOPMENT AND COMMERCE (DDEC), PERMITS MANAGEMENT OFFICE (OGPe-DDEC) FOR BUILDING REQUIREMENTS IN PUERTO RICO. THIS INFORMATION HAS BEEN DEVELOPED FOR THE USE OF PUERTO RICO RESIDENTS AND IS BELIEVED TO MEET THE PUERTO RICO BUILDING CODE. ALL DRAWINGS MUST BE SEPERATELY APPROVED BY DDEC, PERMITS MANAGEMENT OFFICE UPON SUBMISSION OF A BUILDING PERMIT APPLICATION.

No.	Date	Description

ISSUE LOG

PROFESSIONAL SEALS:

SHEET TITLE:

PROTOTYPE #3 SCHEMATIC - ONE STORY, WOOD STRUCTURE & WOOD GABLE ROOF

SHEET INFORMATION:

JOB No.	Date Issued: 05/08/2020
Drawn By:	Sheet Number:
Checked By:	**E-300**
QC Review:	
Phase:	

LEGEND :

- CEILING MOUNTED LIGHTING OUTLET, COORDINATE FIXTURE TYPE WITH ARCHITECT/OWNER
- WALL MOUNTED LIGHTING OUTLET COORDINATE FIXTURE TYPE WITH ARCHITECT/OWNER
- 15 AMPS, 125 VOLTS, NEMA 5-15R, 3-WIRE, TAMPER-RESISTANT, DUPLEX RECEPTACLE, STRAIGHT BLADE, SELF GROUNDING, SIDE WIRE, UL CERTIFIED & NEC COMPLIANCE. IMPACT-RESISTANCE THERMOPLASTIC DESIGN, FLUSH & HORIZONTALLY MOUNTED @ 18" A.F.F. UNLESS SPECIFIED. COORDINATE FINAL COLOR AND MATCHING PLATE WITH THE ARCHITECT.
- SAME AS ABOVE BUT MTD. @ 6" ABOVE FINISH COUNTER. DO NOT EXCEED 42" ABOVE FINISH FLOOR LEVEL (A.F.F.).
- 15 AMP. 125 VOLT RECEPTACLE/OUTLET, NEMA 5-15R, 20 AMPS FEED-THROUGH, TAMPER RESISTANT, SELF GROUNDING, SELF TEST GFCI, BACK AND SIDE WIRED, NYLON WALL PLATE/FACE PLATE, SCREWS AND SELF GROUNDING CLIP. FLUSH & HORIZONTALLY MOUNTED @ 18" A.F.F. UNLESS SPECIFIED. COORDINATE FINAL COLOR AND COVER PLATE WITH ARCHITECT. UL CERTIFIED & NEC COMPLIANCE.
- SAME AS ABOVE BUT MTD. @ 6" ABOVE FINISH COUNTER. DO NOT EXCEED 42" ABOVE FINISH FLOOR LEVEL (A.F.F.).
- 50 AMP. NEMA 14-50R, 4W, 125/250 VOLTS, FLUSH MTD., STRAIGHT BLADE, GROUNDING, MOUNTED @ 18" A.F.F. WITH STAINLESS STEEL COVER PLATE. UL LISTED & NEC COMPLIANCE. COORDINATE RECEPTACLE CONFIGURATION WITH EQUIPMENT'S PIGTAIL PRIOR TO INSTALLATION.
- 30 AMP. NEMA 14-30R, 4W, 125/250 VOLTS, FLUSH MTD., STRAIGHT BLADE, GROUNDING, MOUNTED @ 18" A.F.F. WITH STAINLESS STEEL COVER PLATE. UL LISTED & NEC COMPLIANCE. COORDINATE RECEPTACLE CONFIGURATION WITH EQUIPMENT'S PIGTAIL PRIOR TO INSTALLATION.
- $ 15 AMPS, 120 VOLTS, TOGGLE FRAME SINGLE-POLE AC QUIET SWITCH, RESIDENTIAL GRADE, GROUNDING, SIDE WIRED, MOUNTED @ 48" A.F.F. SWITCH MUST BE ABLE TO WORK WITH FLUORESCENT AND LED LIGHTING FIXTURES. UL LISTED & NEC COMPLIANCE. COORDINATE FINAL COLOR AND MATCHING PLATE WITH THE ARCHITECT.
- $3W 15 AMPS, 120 VOLTS, TOGGLE FRAME 3-WAY AC QUIET SWITCH, RESIDENTIAL GRADE, GROUNDING, SIDE WIRED, MOUNTED @ 48" A.F.F. SWITCH MUST BE ABLE TO WORK WITH FLUORESCENT AND LED LIGHTING FIXTURES. UL LISTED & NEC COMPLIANCE. COORDINATE FINAL COLOR AND MATCHING PLATE WITH THE ARCHITECT.
- J JUNCTION BOX. MINIMUM SIZE 4"x 4" X 2-1/8". METAL ZINC GALVANIZED. WHEN BOXES ARE WALL MOUNTED AND USED AS JUNCTION BOXES, PROVIDE A 4"X4" SINGLE GANG RAISED COVER WITH PLASTIC BLANC COVER PLATE MATCHING RECEPTACLES AND SWITCHES PLATES. IF MOUNTED OUTSIDE PROVIDE AND OUTDOOR COVER PLATE WITH GASKET. WHEN JUNCTION BOX IS CEILING MOUNTED INSTALL WITH ROUND RAISED COVER AND ROUND COVER PLATE. IF MOUNTED OUTDOOR COVER PLATE MUST HAVE GASKET. FOR CEILING APPLICATIONS OCTAGONAL BOXES 21/8" DEEP ARE PERMITTED. JUNCTION BOXES MUST HAVE GROUND BUMP.
- LOAD CENTER, FLUSH MOUNTED, SINGLE PHASE, 100 AMPS, 3W, 120/240 V. INSULATED BONDABLE NEUTRAL, GROUND BAR, 10 KAIC. REFER TO PANEL SCHEDULE
- 125 AMPS N-3R METER BOX/SOCKET WITH MAIN BREAKER 100A/250V/2P. 10K A.I.C., BOX MUST BE ALUMINUM OR STAINLESS STEEL. COORDINATE PRIOR INSTALLATION IF THE SERVICE WILL BE UNDERGROUND OR OVERHEAD. EQUIPMENT MUST BE APPROVED BY P.R.E.P.A.
- TV TELEVISION OUTLET BOX FLUSH MOUNTED. 4"X4"X2-1/8" ZINC GALVANIZED WITH 1G RAISED COVER. COORDINATE COVER PLATE COLOR WITH ARCHITECT. MOUNTED @ 18" A.F.F.
- TV SAME AS ABOVE BUT MOUNTED. @ 6" ABOVE COUNTER. DO NOT EXCEED 42" A.F.F.
- TELEPHONE OUTLET BOX FLUSH MOUNTED. 4"X4"X2-1/8" ZINC GALVANIZED WITH 1G RAISED COVER. COORDINATE COVER PLATE COLOR WITH ARCHITECT. MOUNTED @ 18" A.F.F.
- SAME AS ABOVE BUT MOUNTED. @ 6" ABOVE COUNTER. DO NOT EXCEED 42" A.F.F.
- EMT CONDUIT CONCEALED IN WALLS OR CEILING CONCRETE SLAB
- EMT CONDUIT CONCEALED IN FLOOR CONCRETE SLAB WITH COMPRESSION COUPLINGS
- NEW HOMERUN TO PANELBOARD. PANEL & CIRCUIT AS INDICATED
- SD IONIZATION SMOKE DETECTOR, 120 VOLT. EQUAL MANUFACTURED BY BRK MODEL 4120B WITH BATTERY BACKUP.

IMPORTANT NOTES:

1- ALL SMOKE DETECTORS SHALL BE CONNECTED BETWEEN EACH OTHER FOR PARALLEL ACTIVATION IN CASE OF FIRE TO MEET LATEST HUD & FHA REGULATIONS.
2- ELECTRICAL CONTRACTOR MUST INSTALL ALL METER BASES ACCESSIBLE TO P.R.E.P.A. PERSONNEL.
3- ALL INDOOR & OUTDOOR LIGHTING FIXTURES ARE TO BE PORCELAIN LAMP HOLDERS WITH 26 WATTS FLUORESCENT BULBS OR LED EQUIVALENTS.
4- ELECTRICAL CONTRACTOR MUST VERIFY WITH FIELD ENGINEER ALL FINAL HEIGHTS FOR WIRING DEVICES AND LIGHTING FIXTURES.
5- ALL ELECTRICAL WORK SHALL BE COORDINATED WITH OTHER TRADE.
6- ELECTRICAL CONTRACTOR MUST BALANCE ALL ELECTRICAL LOADS.
7- PROVIDE TYPEWRITTEN IDENTIFICATION CARDS FOR ALL BRANCH CIRCUITS INSIDE THE PANELBOARDS.

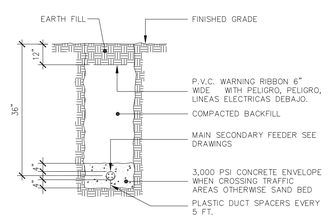

SECONDARY FEEDERS TRENCH DETAIL
NOT TO SCALE — FOR REFERENCE ONLY

SPECIAL NOTES:

1- IN CASE OF CONFLICTS BETWEEN DRAWINGS AND SPECIFICATIONS, THE CONTRACTOR SHALL NOT PROCEED WITH THAT PART OF THE WORK UNTIL SUCH DIFFERENCES HAVE BEEN BROUGHT TO THE ATTENTION OF THE ENGINEER FOR CLARIFICATION.

2- IN CASE THE CONTRACTOR BELIEVES HE HAS DISCOVERED DISCREPANCIES, ERRORS, OMISSIONS, ETC. IN THE DRAWINGS AND/OR SPECIFICATIONS, HE SHALL NOTIFY THE ENGINEER BEFORE PROCEEDING WITH THE WORK. IF THE CONTRACTOR FAILS TO GIVE SUCH NOTICE AND OBTAIN ADEQUATE CLARIFICATION, HE WILL BE HELD RESPONSIBLE FOR THE RESULT OF SUCH ERRORS OR OMISSIONS, AND HE WILL BE HELD RESPONSIBLE FOR THE COST OF RECTIFYING SUCH ERRORS.

3- BEFORE COMMENCING WORK, CONTRACTOR SHALL VERIFY MEASUREMENTS AT SITE AND THE EXISTING STRUCTURES (IF ANY). ANY DIFFERENCES BETWEEN ACTUAL MEASUREMENTS AND THOSE SHOWN ON PLANS, SHALL BE SUBMITTED TO THE ENGINEER FOR CONSIDERATIONS AND DECISIONS BEFORE PROCEEDING WITH THE WORK.

4- THE RIGHT TO CLARIFY THE WORK IS RESERVED BY THE ENGINEER. IF THE ENGINEER CONSIDERS IS NECESSARY, HE WILL PROVIDE ADDITIONAL DETAILS OR INFORMATION.

5- ANY SET OF ELECTRICAL DRAWINGS WHICH IS MISSING AT LEAST ONE OF PAGES OF SET IS AUTOMATICALLY VOID. THIS INFORMATION WAS DEVELOPED TO BE USED OR AND IN CONNECTION WITH THIS PROJECT ONLY. HOWEVER IT REMAINS THE PROPERTY OF THIS OFFICE AND SHALL BE USED ONLY BY AUTHORIZED PERSONS AND CANNOT BE REPRODUCE IN ANY MANNERS UNLESS IT BEARS THE WRITTEN PERMISSION OF THE ARCHITECT.

6- WRITTEN DIMENSIONS SHALL HAVE PRECEDENCE OVER SCALED DIMENSIONS.

7- ALL PROGRAMS, DESIGN, DRAWINGS, SPECIFICATIONS AND PRINTED MATTERS HEREIN ISSUED BY THE ENGINEER ARE THE PROPERTY OF THE ENGINEER AND SHALL NOT BE USED ON ANY OTHER LOCATION OR PURPOSE EXCEPT THE ONE FOR WHICH THEY WERE EXPRESSLY DESIGN, IF THEY, OR ANY PART THEREOF IS REPRODUCED WITHOUT THE WRITTEN CONSENT OT THE ENGINEER, THE PERSON SO DOING WILL BE INDEBTED TO THE ENGINEER FOR HIS FULL COMMISSION.

8- CONTRACTOR SHALL NOT USE FOR THE CONSTRUCTION PURPOSES ANY DOCUMENTS THAT WERE ADVANCED TO HIM PRIOR TO THE START OF THE CONSTRUCTION. ALL PLANS BEING USED BY CONTRACT SHOULD BEAR THE SEAL OF THE ENGINEER WITH P.R.E.P.A.'S ENDORSEMENT AND THE ENGINEER'S SIGNATURE.

9- CONTRACTOR SHALL MAKE PROVISIONS TO ORDER ALL ELECTRICAL EQUIPMENT AND MATERIALS SPECIFIED HEREIN UPON CONTRACT AWARD IN ORDER TO AVOID DELAYS OR CHANGES IN THE SPECIFIED PRODUCTS.

10- CONTRACTOR SHALL SUBMIT IN WRITING (ORIGINAL TO ENGINEER AND DUPLICATE TO THE OWNER). ANY REQUEST TO CHANGE A SPECIFIED ITEM SHALL WAIT FOR THE ENGINEER'S WRITTEN APPROVAL BEFORE PROCEEDING.

11- CONTRACTOR SHALL SUBMIT SAMPLES OF THE SPECIFIED MATERIALS AND MANUFACTURERS LITERATURE OF THE SPECIFIED EQUIPMENT AS WELL AS SHOP DRAWINGS. WHEN SO REQUESTED IN THE DRAWINGS OR SPECIFICATIONS PRIOR TO THE BEGINNING OF CONSTRUCTION.

12- ALL BOLTS, WASHERS, SCREWS AND NUTS EXCEPT IF OTHERWISE SPECIFIED SHALL BE GALVANIZED STEEL.

GENERAL NOTES:

1- PVC CONDUIT SHALL BE USED EXCEPT WHERE NOT ALLOWED BY N.E.C. OR UNLESS OTHER WISE INDICATED, 1/2" IPS MINIMUM SIZE AS ALLOWED BY THE NATIONAL ELECTRICAL CODE. IF ELECTRICAL CONTRACTOR USES NON METALLIC TUBING (ENT) FLEXIBLE CONDUIT IS USED 3/4" IPS IS THE MINIMUM ALLOWED.

2- THHN WIRE SHALL BE USED UNLESS OTHERWISE INDICATED. #12 AWG. MIN. GAUGE ALLOWED

3- WIRING DEVICES AND PLATES SHALL BE WHITE COLOR UNLESS OTHERWISE SPECIFIED BY ARCHITECT/ OWNER.

4- ALL ELECTRICAL INSTALLATION SHALL BE DONE IN STRICT ACCORDANCE WITH N.E.C. AND P.R.E.P.A. REGULATIONS LATEST EDITION.

5- INSTALLATION DETAILS ARE ILLUSTRATIVE AND SHOULD NOT BE USED WITHOUT VERIFYING JOB SITE CONDITIONS, CONTRACTOR SHALL SUBMIT SHOP DRAWINGS SHOWING ANY DEVIATION THEY PERFORM.

6- DIMENSIONS OF JUNCTION OR PULL BOXES SHALL BE REVISED BY THE ELECTRICAL CONTRACTOR ACCORDING TO ACTUAL BUILDING CONDITIONS TO SECURE AT LEAST THE MINIMUM CABLE BENDING RADIUS.

7- ALL ELECTRICAL WIRES MUST BE IDENTIFY WITH THEIR RESPECTIVE CIRCUIT NUMBER AT EACH JUNCTION BOX.

8- ELECTRICAL CONTRACTOR SHALL VISIT THE SITE TO FAMILIARIZE ITSELF WITH THE PROJECTPRIOR TO THEIR BID.

9- MINIMUN SIZE FOR ALL BOXES IS 4" X 4" X 2-3/8". NO 2"X4" BOXES ARE ALLOWED.

10- ALL CONDUITS SHALL HAVE A MINIMUM OF 2#12 (HOT & NEUTRAL) & 1 #12 GROUND CONDUCTOR UNLESS OTHERWISE NOTED. FOR EXAMPLE, CONDUITS SHOWN AS FOLLOW: 2#12 (HOT), 1#12 (NEUTRAL) & 1#12 (GROUND) WIRE; 3#12 (HOT), 1#12 (NEUTRAL) & 1#12 (GROUND).

11- THE ELECTRICAL SYSTEM SHALL HAVE GROUND CONTINUITY. NO JUMPER WILL BE ALLOWED.

ABBREVIATIONS:

RGC	RIGID GALVANIZED CONDUIT
EMT	ELECTRICAL METALLIC CONDUIT
UOS	UNLESS OTHERWISE SPECIFIED
AFF	ABOVE FINISHED FLOOR
ACT	ABOVE COUNTER TOP
TEL	TELEPHONE
NIC	NOT IN CONTRACT OR NOT INCLUDED
GF	DENOTES GROUND FAULT RECEPTACLE.
WP	DENOTES HORIZONTAL SINGLE GANG GFCI RECEPTACLE. WEATHER PROOF COVER PLATE WHEN COVER IS CLOSED, UL LISTED FOR WET LOCATION. EQUAL OR SIMILAR TO THOMAS & BETTS RED DOT CAT.# CCG.
WP1	DENOTES SINGLE GANG WEATHER PROOF COVER PLATE WHILE IN USE, METALLIC, UL LISTED FOR WET LOCATION. MEDIUM HORIZONTAL COVER 31/2" DEEP WITH GASKET. EQUAL OR SIMILAR TO THOMAS & BETTS RED DOT CAT.# CKMU
WP2	DENOTES 2"X4" BLANK COVER PLATE WITH GASKET, ALUMINUM, UL LISTED FOR WET LOCATION. SIMILAR OR EQUAL RED DOT CAT.# 1CCB-AL
WP3	DENOTES 2"X4" SINGLE GANG LIGHT SWITCH WEATHER PROOF COVER PLATE WITH GASKET, ALUMINUM, UL LISTED FOR WET LOCATION.. SIMILAR OR EQUAL RED DOT CAT.# CCT-1

PANELBOARD SCHEDULE

DESIGNATION TYPE	DESCRIPTION	BREAKERS CKT. No.	POLES	TRIP (AMPS)	REMARKS
PANEL "PA"	100 AMPS LOAD CENTER 1ø, 3W, GROUND BUS, FLUSH MOUNTED NEMA 1 ENCLOSURE 120/240 VAC 10,000 AMP. I.C. CAPACITY MIN., 100/2P MAIN BREAKER 24 SINGLE SPACE - 24 POLE SIMILAR TO CUTLER-HAMMER TYPE CH		2	100	MAIN BREAKER
		1	1	20*	LIVING / DINING RM RECEP.
		2	1	20*	BEDROOMS RECEPTACLES
		3	1	20*	KITCHEN RECEPTACLES
		4	1	20*	GENERAL LIGHTING
		5	1	20***	REFRIGERATOR RECEPTACLE
		6	1	20	BATHROOM RECEPTACLES
	* COMBINATION ARC-FAULT BREAKER (AFCI)	7	1	20*	SMOKE DETECTORS
		8	1	20*	LAUNDRY RECEPTACLES
	** GROUND FAULT BREAKER	9	1	20**	CISTERN PUMP
	*** DUAL FUNCTION CIRCUIT BREAKER (CAFI+GFI)	10/12	2	50	RANGE (3#6, 1#10) 1"
		11/13	2	30	WATER HEATER (3#10) 3/4"
		14/16	2	30	DRYER (4#10)3/4"
		15			SPACE
		16-24			SPACE

PANELBOARD SCHEDULE

DESIGNATION TYPE	DESCRIPTION	BREAKERS CKT. No.	POLES	TRIP (AMPS)	REMARKS
PANEL "PA(1)"	100 AMPS LOAD CENTER 1ø, 3W, GROUND BUS, FLUSH MOUNTED NEMA 1 ENCLOSURE 120/240 VAC 10,000 AMP. I.C. CAPACITY MIN., 100/2P MAIN BREAKER 24 SINGLE SPACE - 24 POLE SIMILAR TO CUTLER-HAMMER TYPE CH		2	100	MAIN BREAKER
		1	1	20*	LIVING / DINING RM RECEP.
		2	1	20*	BEDROOMS RECEPTACLES
		3	1	20*	KITCHEN RECEPTACLES
		4	1	20*	GENERAL LIGHTING
		5	1	20*	REFRIGERATOR RECEPTACLE
		6	1	20	BATHROOM RECEPTACLES
	* COMBINATION ARC-FAULT BREAKER (AFCI)	7	1	20*	SMOKE DETECTORS
		8	1	20*	LAUNDRY RECEPTACLES
	** GROUND FAULT BREAKER	9	1	20**	CISTERN PUMP
	*** DUAL FUNCTION CIRCUIT BREAKER (CAFI+GFI)	10/12	2	50	RANGE (3#6, 1#10) 1"
		11/13	2	30	WATER HEATER (4#10) 3/4"
		14/16	2	30	DRYER (4#10)3/4"
		15			SPACE
		16-24			SPACE

PANELBOARD SCHEDULE

DESIGNATION TYPE	DESCRIPTION	BREAKERS CKT. No.	POLES	TRIP (AMPS)	REMARKS
PANEL "PA(2)"	100 AMPS LOAD CENTER 1ø, 3W, GROUND BUS, FLUSH MOUNTED NEMA 1 ENCLOSURE 120/240 VAC 10,000 AMP. I.C. CAPACITY MIN., 100/2P MAIN BREAKER 24 SINGLE SPACE - 24 POLE SIMILAR TO CUTLER-HAMMER TYPE CH		2	100	MAIN BREAKER
		1	1	20*	LIVING / DINING RM RECEP.
		2	1	20*	BEDROOMS RECEPTACLES
		3	1	20*	KITCHEN RECEPTACLES
		4	1	20*	GENERAL LIGHTING
		5	1	20*	REFRIGERATOR RECEPTACLE
		6	1	20	BATHROOM RECEPTACLES
		7	1	20*	SMOKE DETECTORS
		8	1	20	LAUNDRY RECEPTACLES
		9	1	20**	CISTERN PUMP
	* COMBINATION ARC-FAULT BREAKER (AFCI)	10/12	2	50	RANGE (3#6, 1#10) 1"
		11/13	2	30	WATER HEATER (4#10) 3/4"
	** GROUND FAULT BREAKER	14/16	2	30	DRYER (4#10)3/4"
	*** DUAL FUNCTION CIRCUIT BREAKER (CAFI+GFI)	15			SPACE
		16	1	20	MODULE 1 EXPANSION
		17	1	20	MODULE 2 BATHROOM
		18	1	20	MODULE 2 BEDROOMS
		19-24			SPACE

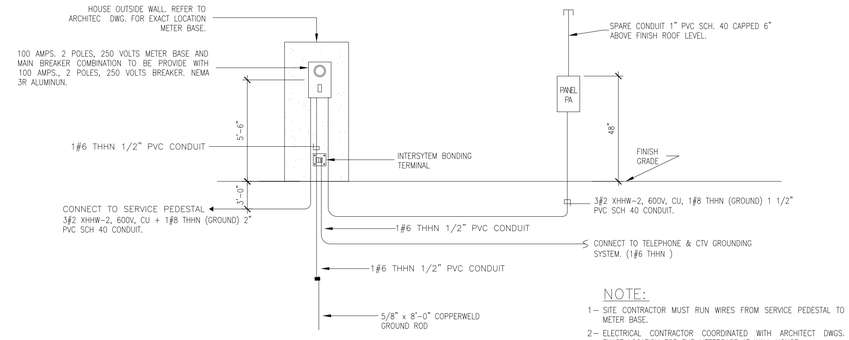

TYP. METER BASE ONE LINE DETAIL
NOT TO SCALE — FOR REFERENCE ONLY

NOTE:
1- SITE CONTRACTOR MUST RUN WIRES FROM SERVICE PEDESTAL TO METER BASE.
2- ELECTRICAL CONTRACTOR COORDINATED WITH ARCHITECT DWGS. EXACT LOCATION FOR THE METERBASE AT WALL HOUSE.

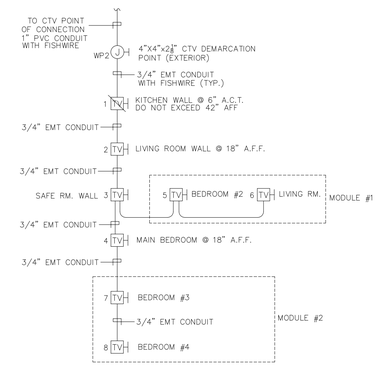

* REFER TO "COMISION DE TELECOMUNICACIONES" FOR INSTALLATION DETAILS.

CTV ONE LINE DIAGRAM
NOT TO SCALE — SCHEMATIC ONLY

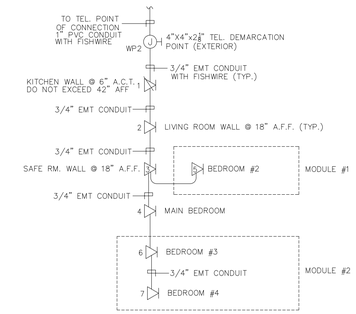

* REFER TO "COMISION DE TELECOMUNICACIONES" FOR INSTALLATION DETAILS.

TELEPHONE ONE LINE DIAGRAM
NOT TO SCALE — SCHEMATIC ONLY

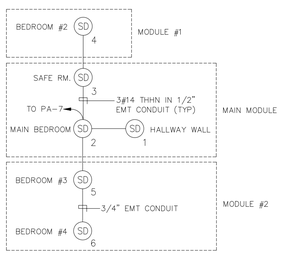

NOTE:
THIS DIAGRAM IS FOR REFERENCE ONLY THE ELECTRICAL CONTRACTOR MAY CHOOSE ANY PATH AS LONG AS ALL DETECTORS ARE CONNECTED BETWEEN EACH OTHER FOR PARALLEL ACTIVATION.

SMOKE DETECTOR ONE LINE DIAGRAM
NOT TO SCALE — SCHEMATIC ONLY

NOT FOR CONSTRUCTION

CONSULTANT:

CLIENT:

PROJECT NAME:

ONE STORY WOOD HOME

NOTE: PRIOR TO CONSTRUCTION CONTACT PUERTO RICO DEPARTMENT OF ECONOMIC DEVELOPMENT AND COMMERCE (DDEC), PERMITS MANAGEMENT OFFICE (OGPe-DDEC) FOR BUILDING REQUIREMENTS IN PUERTO RICO. THIS INFORMATION HAS BEEN DEVELOPED FOR THE USE OF PUERTO RICO RESIDENTS AND IS BELIEVED TO MEET THE PUERTO RICO BUILDING CODE. ALL DRAWINGS MUST BE SEPERATELY APPROVED BY DDEC, PERMITS MANAGEMENT OFFICE UPON SUBMISSION OF A BUILDING PERMIT APPLICATION.

No.	Date	Description

ISSUE LOG

PROFESSIONAL SEALS:

SHEET TITLE:
PROTOTYPE #3 SCHEMATIC - ONE STORY, WOOD STRUCTURE & WOOD GABLE ROOF

SHEET INFORMATION:

JOB No.	Date Issued: 05/08/2020
Drawn By:	Sheet Number:
Checked By:	**E-301**
QC Review:	
Phase:	

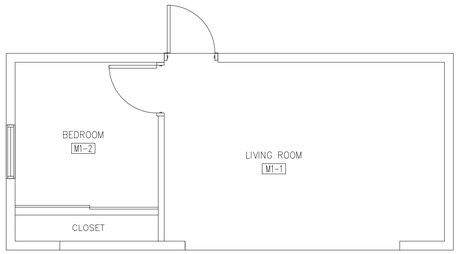

EXPANSION MODULE - A
FLOOR PLAN- SANITARY LAYOUT
SCALE: 1/4"=1'-0"

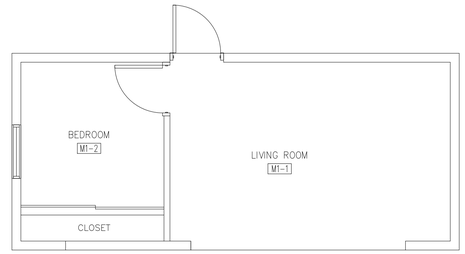

EXPANSION MODULE - A
FLOOR PLAN- POTABLE WATER LAYOUT
SCALE: 1/4"=1'-0"

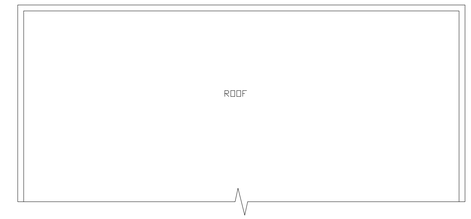

EXPANSION MODULE - A
ROOF PLAN- PLUMBING LAYOUT
SCALE: 1/4"=1'-0"

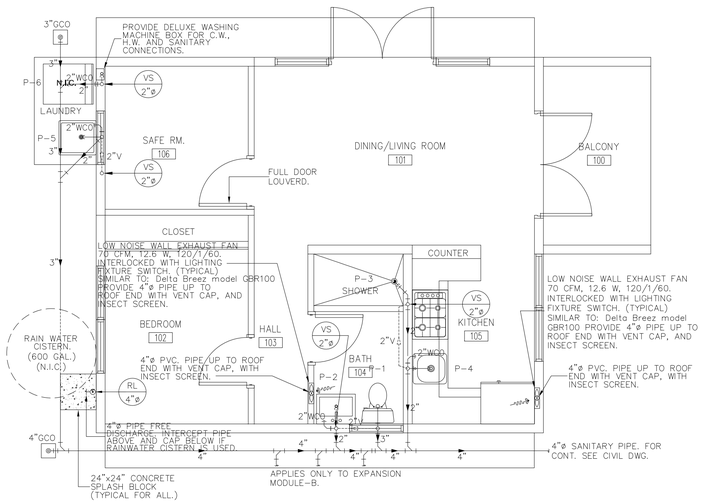

MAIN MODULE HOUSE #3
FLOOR PLAN- SANITARY LAYOUT
SCALE: 1/4"=1'-0"

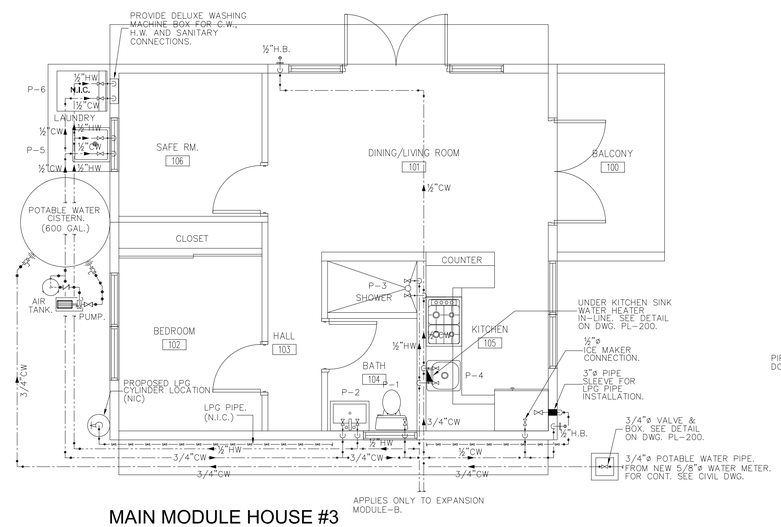

MAIN MODULE HOUSE #3
FLOOR PLAN- POTABLE WATER LAYOUT
SCALE: 1/4"=1'-0"

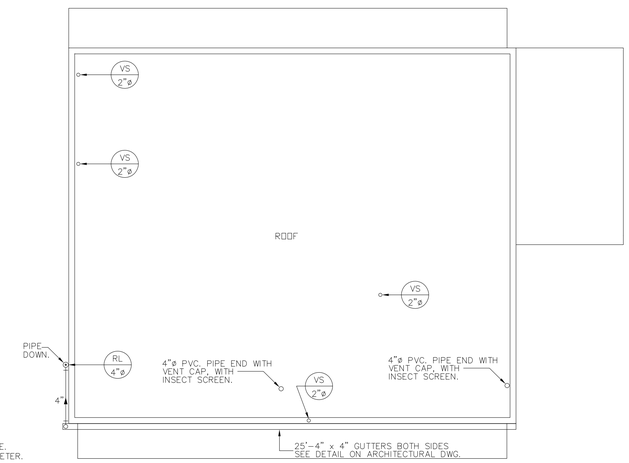

MAIN MODULE HOUSE #3
ROOF PLAN- PLUMBING LAYOUT
SCALE: 1/4"=1'-0"

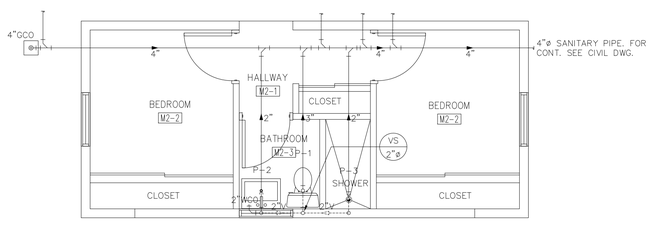

EXPANSION MODULE - B
FLOOR PLAN- SANITARY LAYOUT
SCALE: 1/4"=1'-0"

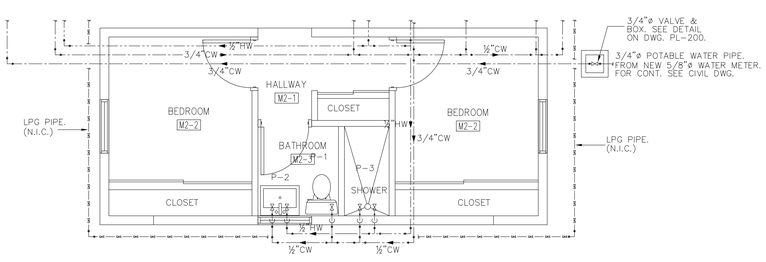

EXPANSION MODULE - B
FLOOR PLAN- POTABLE WATER LAYOUT
SCALE: 1/4"=1'-0"

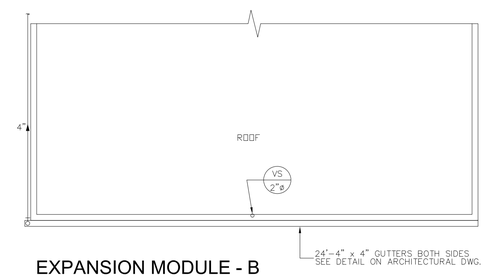

EXPANSION MODULE - B
ROOF PLAN- PLUMBING LAYOUT
SCALE: 1/4"=1'-0"

PLUMBING LEGEND:

- COLD POTABLE WATER LINE
- HOT POTABLE WATER LINE
- SANITARY SEWER LINE
- SANITARY VENTILATION LINE
- CWR ½"ø — INDICATES COLD WATER RISER DESIGNATION AND SIZE
- HWS ½"ø — INDICATES HOT WATER SUPPLY RISER DESIGNATION AND SIZE
- HWR ½"ø — INDICATES HOT WATER RETURN RISER DESIGNATION AND SIZE
- SS 3"ø — INDICATES SANITARY STACK DESIGNATION AND SIZE
- 3"ø WS — INDICATES WASTE STACK DESIGNATION AND SIZE
- RL 3"ø — INDICATES RAIN LEADER STACK DESIGNATION AND SIZE
- VS 1½"ø — INDICATES SANITARY VENTILATION STACK DESIGNATION AND SIZE
- P-1 — INDICATES PLUMBING FIXTURE DESIGNATION SEE SCHEDULE
- POINT OF CONNECTION

PLUMBING ABBREVIATIONS:

C.W.	COLD WATER
HWS	HOT WATER SUPPLY
HWR	HOT WATER RETURN
(TYP.)	TYPICAL
VS	VENT STACK
WCO	WALL CLEAN OUT
FCO	FLOOR CLEAN OUT
GCO	GROUND CLEAN OUT
W.H.	WATER HEATER
FD	FLOOR DRAIN
V	VENTILATION
H.B.	HOSE BIBB
(E)	EXISTING
CC	CEILING CASSETTE
FCU	FAN COIL UNIT

NOTE:

1) NON-POTABLE WATER SYSTEM IS NOT IN CONTRACT. CISTERN LOCATION DEPICTED ON DRAWINGS SHOULD BE EVALUATED AND MODIFIED ACCORDING TO ACTUAL SITE CONDITIONS.

2) LPG SYSTEM IS NOT IN CONTRACT. INSTALLATION SHALL COMPLY WITH APPLICABLE CODES, REGULATIONS, STANDARDS AND "COMISION DE SERVICIO PUBLICO"

NOT FOR CONSTRUCTION

CONSULTANT:

CLIENT:

PROJECT NAME:

ONE STORY WOOD HOME

NOTE: PRIOR TO CONSTRUCTION CONTACT PUERTO RICO DEPARTMENT OF ECONOMIC DEVELOPMENT AND COMMERCE (DDEC), PERMITS MANAGEMENT OFFICE (OGPe-DDEC) FOR BUILDING REQUIREMENTS IN PUERTO RICO. THIS INFORMATION HAS BEEN DEVELOPED FOR THE USE OF PUERTO RICO RESIDENTS AND IS BELIEVED TO MEET THE PUERTO RICO BUILDING CODE. ALL DRAWINGS MUST BE SEPERATELY APPROVED BY DDEC, PERMITS MANAGEMENT OFFICE UPON SUBMISSION OF A BUILDING PERMIT APPLICATION.

No.	Date	Description

ISSUE LOG

PROFESSIONAL SEALS:

SHEET TITLE:

PROTOTYPE #3 FLOOR PLAN- PLUMBING LAYOUT

SHEET INFORMATION:

JOB No.	Date Issued: 05/08/2020
Drawn By:	Sheet Number:
Checked By:	PL-102
QC Review:	
Phase:	

PLUMBING FIXTURE SHEDULE

DESIG-NATION	DESCRIPTIONS	LOCATIONS	UNIT WASTE OR SOIL	VENT SIZE	WATER SUPPLY		FIXTURES		REMARKS
					COLD	HOT	COLD	HOT	
P-1	WATER CLOSET (TANK)	TOILETS	3"	2"	½"	–	½"	–	SEE ARCHITECTURAL DWG'S.
P-2	LAVATORY	TOILETS	1½"	1½"	½"	–	½"	–	SEE ARCHITECTURAL DWG'S.
P-3	SHOWER	TOILETS	2"	1½"	3/4"	–	3/4"	–	SEE ARCHITECTURAL DWG'S.
P-4	KITCHEN SINK	KITCHEN	1½"	1½"	½"	–	½"	–	SEE ARCHITECTURAL DWG'S.
F.C.O.	FLOOR CLEANOUT	AS SHOWN ON DWGS.	–	–	–	–	–	–	RECESSED HEAD BRONZE CLEANOUT PLUG
W.C.O.	WALL CLEANOUT	AS SHOWN ON DWGS.	–	–	–	–	–	–	RECESSED HEAD BRONZE CLEANOUT PLUG

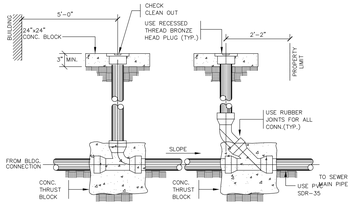

ELEVATION
CLEAN OUT INSTALLATION DETAIL
SCALE : N.T.S.

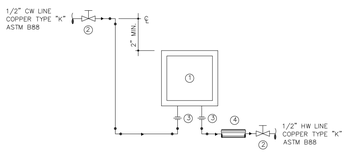

LEGEND:

1. IN-LINE WATER HEATER 7.0 KW, 208/1/60. 30 AMPS. SIMILAR TO MAREY SANTON MODEL HP 724.
2. 1/2" GATE VALVE
3. 1/2" UNIVERSAL CONN.
4. ½" THICK NEOPRENE INSULATION. (APPLIES FOR EXPOSED HOT WATER PIPING).

IN-LINE WATER HEATER INSTALLATION DETAIL
SCALE : N.T.S.

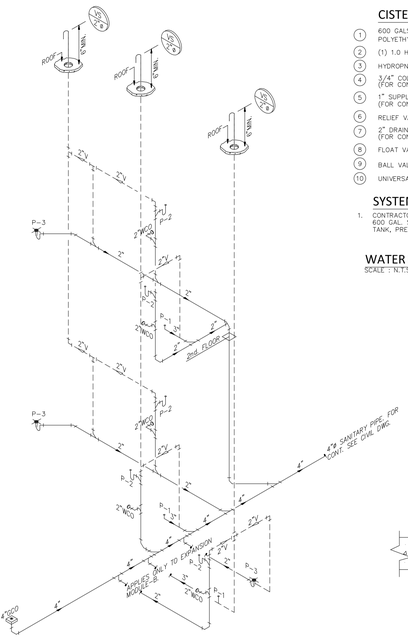

MAIN MODULE HOUSE #4 SANITARY DIAGRAM
SCALE : N.T.S.

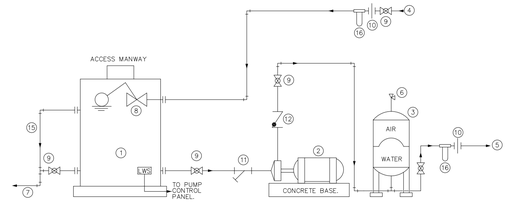

CISTERN LEGEND:

1. 600 GALS. (5,008 lb) 5'-9" x 3'-7". POLYETHYLENE POTABLE WATER CISTERN.
2. (1) 1.0 HP CENTRIFUGAL PUMP
3. HYDROPNEUMATIC TANK.
4. 3/4" COLD WATER CISTERN FEED LINE (COPPER). (FOR CONT. SEE PLUMBING DWG'S).
5. 1" SUPPLY LINE TO SYSTEM (COPPER). (FOR CONT. SEE PLUMBING DWG'S).
6. RELIEF VALVE
7. 2" DRAIN PIPE (PVC). (FOR CONT. SEE PLUMBING DWG'S).
8. FLOAT VALVE
9. BALL VALVE (BRONZE BODY).
10. UNIVERSAL UNION
11. STRAINER
12. SWING CHECK VALVE
13. NOT USED
14. NOT USED
15. 2" OVER FLOW (PVC)
16. IN-LINE FILTER (5 Mc)
FS NOT USED
PQ NOT USED
PS NOT USED
PI NOT USED
LWS LOW WATER SWITCH

SYSTEM DESCRIPTION:

1. CONTRACTOR SHALL FURNISH AND INSTALL A WATER RESERVOIR/BOOSTER SYSTEM WITH TWO 600 GAL. STORAGE CAPACITY SIZE POLIETILENE TANK, 1 HP BOOSTER PUMP, HYDROPNEUMATIC TANK, PRESSURE SWITCH, IN-LINE FILTER, 24"ø ACCESS MAN WAY.

WATER FLOW DIAGRAM
SCALE : N.T.S.

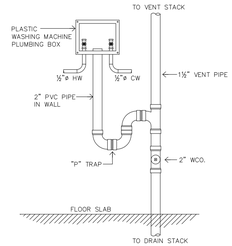

CLOTH WASHER PLUMBING BOX INSTALLATION DETAIL
SCALE:N.T.S.

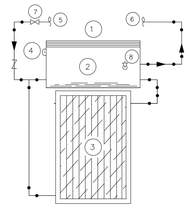

SOLAR WATER HEATER LEGEND:

1. SOLAR WATER HEATER, UNIVERSAL SOLAR PRODUCTS MODEL A82245S.
2. STORAGE TANK.
3. SOLAR HEAT COLLECTORS.
4. AUXILIARY ELECTRICAL HEATER
5. 1" DIA. COLD WATER SUPPLY (COPPER)
6. 1" DIA. HOT WATER OUTLET (COPPER)
7. 1" DIA. BRONZE BODY GATE VALVE.
8. 1" DIA. PRESSURE TEMPERATURE RELIEF VALVE INSTALLED IN THE HOT WATER LINE WITHIN 3" OF THE TOP OF THE WATER TANK. ASME RATED.

HOT WATER FLOW DIAGRAM (N.I.C.)
SCALE : N.T.S.

NOT IN CONTRACT

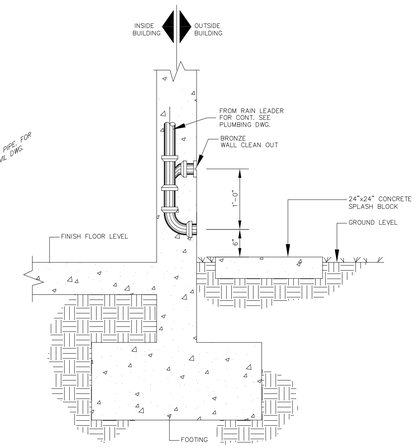

STORM SEWER FREE DISCHARGE DETAIL
SCALE : N.T.S.

PLUMBING GENERAL NOTES:

1. ALL PLUMBING WORK SHALL BE IN STRICT ACCORDANCE WITH THE DEPARTMENT OF HEALTH OF P.R., THE LOCAL BUILDING CODE, THE NATIONAL PLUMBING CODE (A.S.A. A 40 8-1955) AND THE SPECIFICATIONS ISSUED FOR THIS PROJECT.
2. CLEANOUTS SHALL BE OF THE SAME NOMINAL SIZE AS THE PIPE DIAMETER UP TO 4".
3. THE CONTRACTOR SHALL FURNISH AND SET IN PLACE BEFORE CONCRETE POURING ALL NECESSARY SLEEVES FOR WASTE OR SOIL, COLD WATER LINES. THESE SLEEVES SHALL BE AS PER THE SPECIFICATIONS.
4. THE PLUMBING CONTRACTOR SHALL DETERMINE THE EXACT LOCATION OF THE PIPING TO AVOID ANY INTERFERENCE WITH PIPING AND/OR EQUIPMENT BEING INSTALLED BY OTHER CONTRACTORS.
5. FOR FIXTURES AND/OR EQUIPMENT NOT LISTED IN THE SCHEDULE, SEE THE SPECIFICATIONS.
6. CLEANOUTS SHALL BE PLACED AS SHOWN ON DRAWINGS.
7. THE CONTRACTOR SHALL VERIFY IN FIELD ALL INVERT ELEVATIONS AND SHALL MAKE ANY NECESSARY ADJUSTMENT AS REQUIRED BY FIELD CONDITIONS AND AS REQUIRED, TO OBTAIN THE PROPER SLOPES.
8. IT IS THE INTENTION OF THE DRAWINGS TO CALL FOR FINISHED WORK, COMPLETE, TESTED AND READY FOR OPERATION. MINOR DETAILS NOT SHOWN OR SPECIFIED, BUT NECESSARY FOR THE PROPER INSTALLATION AND FOR FUNCTIONING AND OPERATION OF THE SYSTEM SHALL FORM PART OF THE WORK TO BE DONE BY THE CONTRACTOR.
9. BIDDERS SHALL VISIT THE SITE AND ACQUAINT THEMSELVES WITH THE CONDITIONS AS THEY ACTUALLY EXIST AND VERIFY DIMENSIONS, LOCATIONS AND DETAILS REQUIRED TO COMPLETE THE WORK, WHICH WILL BE THE ONLY OPPORTUNITY FOR POTENTIAL CONTRACTORS TO SEE THE SITE. FAILURE TO VISIT THE PROJECT AREA WILL IN NO WAY RELIEVE THE SUCCESSFUL BIDDER OF FURNISHING ALL MATERIAL AND PERFORMING ALL WORK REQUIRED FOR THE COMPLETION OF THE CONTRACT. VISITS TO THE PROJECT AREA SHALL BE ARRANGED THROUGH THE OWNER.
10. PROVIDE ACCESS FOR OPERATION AND MAINTENANCE TO EVERY PLUMBING VALVE. ACCESS SHALL BE AS REQUIRED BY ARCHITECT.
11. THE CONTRACTOR SHALL, WITHOUT EXTRA CHARGE, MAKE REASONABLE MODIFICATIONS IN THE LAYOUT, AS NEEDED, TO PREVENT CONFLICT WITH WORK OF OTHER TRADES OR FOR PROPER EXECUTION OF THE WORK.
12. CONTRACTOR SHALL LOCATE IN FULLY ACCESSIBLE POSITIONS ALL EQUIPMENT WHICH MUST BE SERVICED, OPERATED, OR MAINTAINED.
13. INSTALL WATER HAMMER ARRESTER AS PER PDI-WH-201.
14. ALL UNDERGROUND COPPER PIPING SHALL BE TYPE "K"ASTM B-88, DIAMETER AS INDICATED.
15. ALL COPPER PIPING ABOVE FINISH FLOOR ELEVATION SHALL BE TYPE "L"ASTM B-88, DIAMETER AS INDICATED.
16. ALL WASTE, SANITARY AND STORM DRAINAGE LINES SHALL BE PVC SCH-40.
17. ALL PIPING SHALL BE CONCEALED IN FLOOR TOPPINGS, WALL OR CHASES UNLESS OTHERWISE NOTED.
18. LONG SWEEP BENDS OR LONG SWEEP FITTINGS SHALL BE PROVIDED AT THE BASE OF ALL STACKS.
19. CLEANOUTS SHALL NOT BE MORE THAN 50 FEET APART
20. THE PLUMBING CONTRACTOR SHALL COORDINATE HIS/HER PORTION OF THE WORK WITH THE GENERAL CONTRACTOR AND SHALL PROVIDE SLEEVES AT SLABS OR BEAMS FOR PIPING LAYOUT AND FIXTURES INSTALLATION.
21. ALL FIXTURES SHALL BE INSTALLED IN ACCORDANCE WITH THE MANUFACTURER SPECIFICATIONS.
22. SIZES SHOWN IN FIXTURES SCHEDULE ARE MINIMUM AND SHALL BE INCREASED AS NECESSARY TO COMPLY WITH CODE REQUIREMENTS OR AS SHOWN ON DRAWINGS.
23. SINGLE AND DOUBLE TEES AND QUATER BENDS SHALL BE USED IN LINES ONLY WHERE THE DIRECTION OF FLOW IS FROM THE HORIZONTAL TO THE VERTICAL.
24. ALL HORIZONTAL PORTIONS OF SOIL STACKS AND BRANCHES SHALL HAVE MINIMUM SLOPE OF 1/4" PER FOOT FOR PIPES 3" DIAMETER OR LESS. 1/8" PER FOOT FOR PIPES 4" OR LARGER IN DIAMETER.
25. THE PLUMBING CONTRACTOR SHALL COORDINATE HIS/HER WORK IN ORDER TO AVOID ANY INTERFERENCE WITH THE WORK OF OTHER CONTRACTORS AND THE INSTALLATION OF FIXTURES AND OR EQUIPMENT BY OTHERS.
26. WATER HAMMER ARRESTER SHALL BE INSTALLED IN ALL WATER DISTRIBUTION BRANCHES WHENEVER INDICATED ON THE DRAWINGS AS PER MANUFACTURER RECOMMENDATIONS. SAME SHALL BE SERIES 5000, MODELS AS SHOWN ON LEGEND.
27. WATER HAMMER ARRESTERS INSTALLED ON WALLS SHALL BE PROVIDED WITH 12" X 12" FRAME WITH HINGERS LOCKED DOOR, MODEL JAY R. SMITH FIG.4762-SL,WITH ITS BOTTOM AT 18" ABOVE FINISH FLOOR ELEVATION.
28. GATE VALVES LOCATED UNDERGROUND OR BELOW FLOOR SLABS SHALL BE INSTALLED WITHIN A CAST IRON OR CONCRETE BOX WITH 9 X 9 J.R. SMITH ACCESS COVER FIG. 4915-U.
29. PLUMBING CONTRACTOR SHALL PROVIDE ALL NECESSARY SERVICES AND/OR CONNECTIONS REQUIRED FOR THE PLUMBING FIXTURES AND/OR EQUIPMENT SHOWN ON THE FIXTURES PLANS.
30. PLUMBING CONTRACTOR SHALL PROVIDE ALL NECESSARY ROUGHING-IN AND SHALL INSTALL THE PLUMBING FIXTURES INDICATED ON THESE DRAWINGS.
31. WHENEVER REQUIRED OR NEEDED, THE PLUMBING CONTRACTOR SHALL PREPARE AND SUBMIT THE NECESSARY SHOP DRAWINGS FOR THE APPROVAL OF THE ARCHITECT.
32. BEFORE STARTING CONSTRUCTION, THE PLUMBING CONTRACTOR SHALL VERIFY THE EXACT LOCATION AND ELEVATIONS OF EXISTING PIPE LINES TO REMAIN IN USE ANY SIGNIFICANT DISCREPANCY WITH THE INFORMATION SHOWN ON THESE DRAWINGS SHALL BE NOTIFIED TO THE ARCHITECT FOR REVISION AND/OR CLARIFICATION.
33. ALL EXPOSED HOT WATER LINES SHALL BE INSULATED WITH 1-1/2" THICK MATERIAL WITH A THERMAL CONDUCTIVITY NOT TO EXCEED 0.228TU PER SQ. INCH PER HOUR AT MEAN TEMPERATURE OF 75°F.
34. FIXTURES, FITTINGS, ACCESSORIES, MATERIAL AND ALL PLUMBING PRODUCTS SHALL BE AS PER SPECIFICATIONS ON THESE DRAWINGS AND CONTRACT SPECIFICATIONS. EQUAL OR SIMILAR SHALL BE ONLY ACCEPTED IF PREVIOUSLY APPROVED BY THE ARCHITECT.

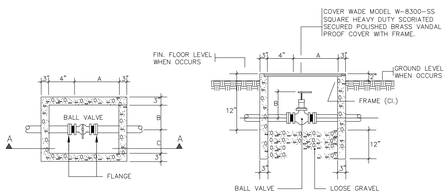

PLAN SECTION A-A

VALVE BOX SCHEDULE								
DIMENSIONS MARKED	VALVE SIZE (IN INCHES)							
	3"	2 1/2"	2"	1 1/2"	1 1/4"	1"	3/4"	1/2"
A	13"	13"	11"	11"	11"	8"	8"	8"
B	6"	6"	5"	5"	5"	4"	4"	4"
C	9"	9"	8"	8"	8"	6"	6"	6"
ACCESS COVER SIZE	AS REQUIRED							

NOTE: VALVES 2 1/2" & SMALLER SHALL BE EQUAL TO NIBCO MODEL 595-Y-66. FOR 3" VALVE USE NIBCO MODEL 590-Y-66 OR APPROVED EQUAL.

VALVE BOX DETAIL
SCALE : N.T.S.

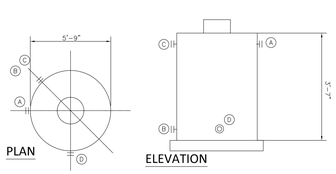

PLAN ELEVATION

TAG	SIZE	DESCRIPTION	CONNECTION TYPE
A	3/4"ø	WATER INLET	FLANGE
B	2"ø	DRAIN	FLANGE
C	2"ø	OVERFLOW	FLANGE
D	3/4"ø	SUPPLY	FLANGE
E	24"ø	ACCESS MAN-WAY	N/A

TANK DETAIL
SCALE : N.T.S.

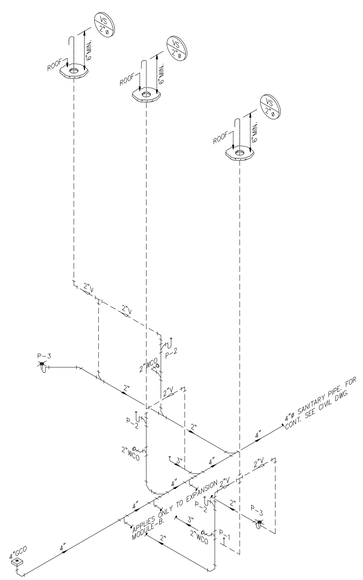

MAIN MODULE HOUSE #1, 2 & 3 SANITARY DIAGRAM
SCALE : N.T.S.

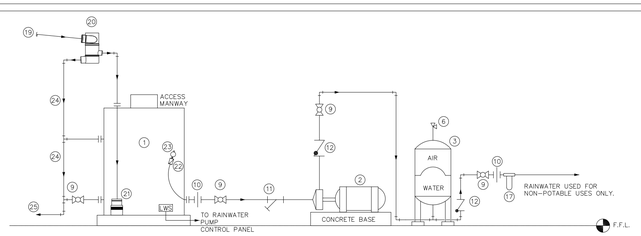

1. 600 GALS. STORM SEWER CISTERN. (5,010 lb WET WEIGHT)
2. 1 HP CENTRIFUGAL PUMP 208-1-60.
3. HYDROPNEUMATIC TANK.
4. 3/4" COLD WATER LINE FROM WATER METER (COPPER TYPE "K" ASTMB-88. FOR CONT. SEE PLUMBING DWG'S).
5. 3/4" SUPPLY LINE TO SYSTEM (COPPER TYPE "K" ASTMB-88. FOR CONT. SEE PLUMBING DWG'S).
6. RELIEF VALVE
7. 2" DRAIN PIPE (PVC SCH. 40 ASTMD-2665 FOR CONT. SEE PLUMBING DWG'S).
8. FLOAT VALVE
9. BALL VALVE (BRONZE BODY).
10. UNIVERSAL UNION
11. STRAINER
12. CHECK VALVE
13. NOT USED
14. PRESSURE REGULATING NON-SLAM CHECK VALVE.
15. 2" OVER FLOW (PVC SCH. 40 ASTMD-2665)
16. IN-LINE FILTER (5 Mc)
17. IN-LINE FILTER (50 Mc)
18. CONTROL VALVE
19. 4" RAIN COLLECTION PIPE (PVC SCH. 40 ASTMD-2665 FOR CONT. SEE PLUMBING DWG'S).
20. VORTEX RAINWATER FILTER SMITH FIG. RH952O-06. W/ STAINLESS STEEL WALL BRACKET.
21. SMOOTHING INLET SMITH FIG. RH9530SI.
22. FLOATING FILTERS AND HOSES
23. MULTI-FUNCTIONAL OVERFLOW DEVICE
24. 4" OVER FLOW (PVC SCH. 40 ASTMD-2665 FOR CONT. SEE PLUMBING DWG'S).
25. 4" DRAIN PIPE (PVC SCH. 40 ASTMD-2665 FOR CONT. SEE PLUMBING DWG'S).
26. NOT USED
PQ NOT USED
PS NOT USED
PI NOT USED
FS NOT USED
LWS LOW WATER SWITCH
(NO) NORMALLY OPEN
(NC) NORMALLY CLOSED

SYSTEM DESCRIPTION:

1. CONTRACTOR SHALL FURNISH AND INSTALL A WATER RESERVOIR/BOOSTER SYSTEM WITH 600 GAL. STORAGE CAPACITY SIZE FIBERGLASS TANK, 1 HP BOOSTER PUMP, HYDROPNEUMATIC TANK, PRESSURE SWITCH, IN-LINE FILTER, BY PASS AND LOW WATER CUT-OFF SWITCH AND 24"ø ACCESS MAN WAY.

NON-POTABLE WATER SYSTEM FLOW DIAGRAM (N.I.C.)
SCALE : N.T.S.

NOT IN CONTRACT

PLUMBING LEGEND:

- COLD POTABLE WATER LINE
- HOT POTABLE WATER LINE
- SANITARY SEWER LINE
- SANITARY VENTILATION LINE
- CWR ½"ø — INDICATES COLD WATER RISER DESIGNATION AND SIZE
- HWS ½"ø — INDICATES HOT WATER SUPPLY RISER DESIGNATION AND SIZE
- HWR ½"ø — INDICATES HOT WATER RETURN RISER DESIGNATION AND SIZE
- SS 3"ø — INDICATES SANITARY STACK DESIGNATION AND SIZE
- 3"ø WS — INDICATES WASTE STACK DESIGNATION AND SIZE
- RL 3"ø — INDICATES RAIN LEADER STACK DESIGNATION AND SIZE
- VS 1½"ø — INDICATES SANITARY VENTILATION STACK DESIGNATION AND SIZE
- P-1 — INDICATES PLUMBING FIXTURE DESIGNATION SEE SCHEDULE
- POINT OF CONNECTION

PLUMBING ABBREVIATIONS:

C.W.	COLD WATER
HWS	HOT WATER SUPPLY
HWR	HOT WATER RETURN
(TYP.)	TYPICAL
VS	VENT STACK
WCO	WALL CLEAN OUT
FCO	FLOOR CLEAN OUT
GCO	GROUND CLEAN OUT
W.H.	WATER HEATER
FD	FLOOR DRAIN
V	VENTILATION
H.B.	HOSE BIBB
(E)	EXISTING
CC	CEILING CASSETTE
FCU	FAN COIL UNIT

NOT FOR CONSTRUCTION

CONSULTANT:

CLIENT:

PROJECT NAME:

ONE STORY WOOD HOME

NOTE: PRIOR TO CONSTRUCTION CONTACT PUERTO RICO DEPARTMENT OF ECONOMIC DEVELOPMENT AND COMMERCE (DDEC), PERMITS MANAGEMENT OFFICE (OGPe-DDEC) FOR BUILDING REQUIREMENTS IN PUERTO RICO. THIS INFORMATION HAS BEEN DEVELOPED FOR THE USE OF PUERTO RICO RESIDENTS AND IS BELIEVED TO MEET THE PUERTO RICO BUILDING CODE. ALL DRAWINGS MUST BE SEPERATELY APPROVED BY DDEC, PERMITS MANAGEMENT OFFICE UPON SUBMISSION OF A BUILDING PERMIT APPLICATION.

No.	Date	Description

ISSUE LOG

PROFESSIONAL SEALS:

SHEET TITLE:

PLUMBING DETAILS, SCHEDULES & NOTES

SHEET INFORMATION:

JOB No.	Date Issued: 05/08/2020
Drawn By:	Sheet Number:
Checked By:	PL-200
QC Review:	
Phase:	

STRUCTURAL CALCULATIONS

FOR

PR Homes: One Story Wood House

PUERTO RICO

Code Search

Code: ASCE 7 - 16

Occupancy:

Occupancy Group = R Residential

Risk Category & Importance Factors:

Risk Category = II

Wind factor = 1.00
Snow factor = 1.00
Seismic factor = 1.00

Type of Construction:

Fire Rating:
Roof = 0.0 hr
Floor = 0.0 hr

Building Geometry:

Roof angle (θ)	4.00 / 12	18.4 deg
Building length (L)	24.0 ft	
Least width (B)	20.0 ft	
Mean Roof Ht (h)	15.3 ft	
Parapet ht above grd		
Minimum parapet ht		

Live Loads:

Roof
0 to 200 sf: 20 psf
200 to 600 sf: 24 - 0.02Area, but not less than 12 psf
over 600 sf: 12 psf

Floor:

Typical Floor	40 psf
Partitions	15 psf
Lobbies & first floor corridors	100 psf
Corridors above first floor	80 psf
Balconies (1.5 times live load)	60 psf

STARR II
PR Prescriptive Homes Calculations

JOB TITLE	PR Homes: One Story Wood House		
JOB NO.		SHEET NO.	
CALCULATED BY	SW	DATE	2/6/20
CHECKED BY	MH	DATE	2/6/20

Wind Loads : ASCE 7- 16

Ultimate Wind Speed	190 mph
Nominal Wind Speed	147.2 mph
Risk Category	II
Exposure Category	D
Enclosure Classif.	Partially Open Building
Internal pressure	+/-0.18
Directionality (Kd)	0.85
Kh case 1	1.033
Kh case 2	1.033
Type of roof	Gable

Topographic Factor (Kzt)
Topography
Hill Height (H)
Half Hill Length (Lh)
Actual H/Lh = 0.00
Use H/Lh = 0.00
Modified Lh = 0.0 ft
From top of crest: x =
Bldg up/down wind?

H< 15ft;exp D
∴ Kzt=1.0

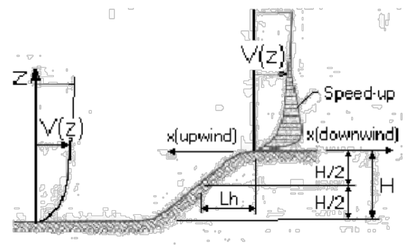

ESCARPMENT

H/Lh= 0.00 K_1 = 0.000
x/Lh = 0.00 K_2 = 0.000
z/Lh = 0.00 K_3 = 1.000
At Mean Roof Ht:
Kzt = $(1+K_1K_2K_3)^2$ = 1.00 use 1.00

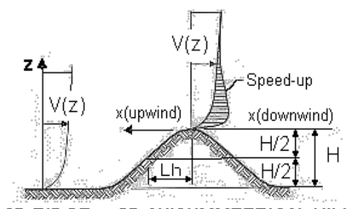

2D RIDGE or 3D AXISYMMETRICAL HILL

Gust Effect Factor

h = 15.3 ft
B = 20.0 ft
/z (0.6h) = 9.2 ft

Flexible structure if natural frequency < 1 Hz (T > 1 second).
If building h/B>4 then may be flexible and should be investigated.
h/B = 0.76 Rigid structure (low rise bldg)

G = 0.85 Using rigid structure default

Rigid Structure

ē =	0.13	
ℓ =	650 ft	
z_{min} =	7 ft	
c =	0.13	
g_Q, g_v =	3.4	
L_z =	553.7 ft	
Q =	0.95	
I_z =	0.15	
G =	0.90	use G = 0.85

Flexible or Dynamically Sensitive Structure

34 ncy (η_1) =	0.0 Hz				
Damping ratio (β) =	0				
/b =	0.80				
/α =	0.11				
Vz =	193.3				
N_1 =	0.00				
R_n =	0.000				
R_h =	28.282	η =	0.000	h =	15.3 ft
R_B =	28.282	η =	0.000		
R_L =	28.282	η =	0.000		
g_R =	0.000				
R =	0.000				
Gf =	0.000				

Enclosure Classification

Test for Enclosed Building: Ao < 0.01Ag or 4 sf, whichever is smaller

Test for Open Building: All walls are at least 80% open.
Ao ≥ 0.8Ag

Test for Partially Enclosed Building: Predominately open on one side only

	Input			Test	
Ao	500.0	sf	Ao ≥ 1.1Aoi	NO	
Ag	600.0	sf	Ao > 4' or 0.01Ag	YES	
Aoi	1000.0	sf	Aoi / Agi ≤ 0.20	YES	Building is NOT Partially Enclosed
Agi	10000.0	sf			

Conditions to qualify as Partially Enclosed Building. Must satisfy all of the following:
Ao ≥ 1.1Aoi
Ao > smaller of 4' or 0.01 Ag
Aoi / Agi ≤ 0.20
Where:
Ao = the total area of openings in a wall that receives positive external pressure.
Ag = the gross area of that wall in which Ao is identified.
Aoi = the sum of the areas of openings in the building envelope (walls and roof) not including Ao.
Agi = the sum of the gross surface areas of the building envelope (walls and roof) not including Ag.

Test for Partially Open Building: A building that does not qualify as open, enclosed or partially enclosed.
(This type building will have same wind pressures as an enclosed building.

Reduction Factor for large volume partially enclosed buildings (Ri) :

If the partially enclosed building contains a single room that is unpartitioned , the internal pressure coefficient may be multiplied by the reduction factor Ri.

Total area of all wall & roof openings (Aog): 0 sf
Unpartitioned internal volume (Vi) : 0 cf
Ri = 1.00

Ground Elevation Factor (Ke)

Grd level above sea level = 0.0 ft Ke = 1.0000
Constant = 0.00256 Adj Constant = 0.00256

STARR II
PR Prescriptive Homes Calculations

JOB TITLE	PR Homes: One Story Wood House		
JOB NO.		**SHEET NO.**	
CALCULATED BY	SW	**DATE**	2/6/20
CHECKED BY	MH	**DATE**	2/6/20

Wind Loads - MWFRS all h (Except for Open Buildings)

Kh (case 2) =	1.03	h =	15.3 ft	GCpi =	+/-0.18
Base pressure (q_h) =	**81.2 psf**	ridge ht =	16.9 ft	G =	0.85
Roof Angle (θ) =	18.4 deg	L =	24.0 ft	qi = qh	
Roof tributary area - (h/2)*L:	183 sf	B =	20.0 ft		
(h/2)*B:	153 sf				

Ultimate Wind Surface Pressures (psf)

Surface	Wind Normal to Ridge B/L = 0.83 h/L = 0.76				Wind Parallel to Ridge L/B = 1.20 h/L = 0.64				
	Cp	q_hGC_p	w/+q_iGC_{pi}	w/-q_hGC_{pi}	Dist.*	Cp	q_hGC_p	w/ +q_iGC_{pi}	w/ -q_hGC_{pi}
Windward Wall (WW)	0.80	55.2	see table below			0.80	55.2	see table below	
Leeward Wall (LW)	-0.50	-34.5	-49.1	-19.9		-0.46	-31.7	-46.3	-17.1
Side Wall (SW)	-0.70	-48.3	-62.9	-33.7		-0.70	-48.3	-62.9	-33.7
Leeward Roof (LR)	-0.59	-40.4	-55.0	-25.8		Included in windward roof			
Neg Windward Roof pressure	-0.65	-44.9	-59.5	-30.3	0 to h/2*	-0.99	-68.3	-82.9	-53.7
Pos/min Windward Roof press.	-0.12	-8.4	-23.0	6.2	h/2 to h*	-0.85	-58.4	-73.0	-43.7
					h to 2h*	-0.55	-38.2	-52.8	-23.6
					Min press.	-0.18	-12.4	-27.0	2.2

*Horizontal distance from windward edge

Windward Wall Pressures at "z" (psf)

	z	Kz	Kzt	Windward Wall q_zGC_p	w/+q_iGC_{pi}	w/-q_hGC_{pi}	Combined WW + LW Normal to Ridge	Parallel to Ridge
	0 to 15'	1.03	1.00	55.0	40.4	69.6	89.5	86.8
h=	15.3 ft	1.03	1.00	55.2	40.6	69.8	89.7	86.9
ridge =	16.9 ft	1.05	1.00	56.2	41.6	70.8	90.7	87.9

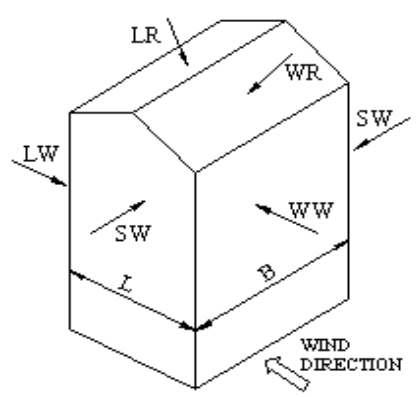

WIND NORMAL TO RIDGE

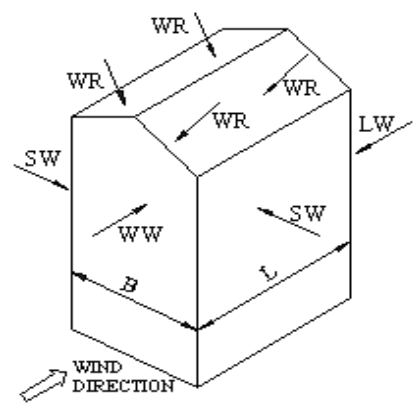

WIND PARALLEL TO RIDGE

NOTE:
See figure in ASCE7 for the application of full and partial loading of the above wind pressures. There are 4 different loading cases.

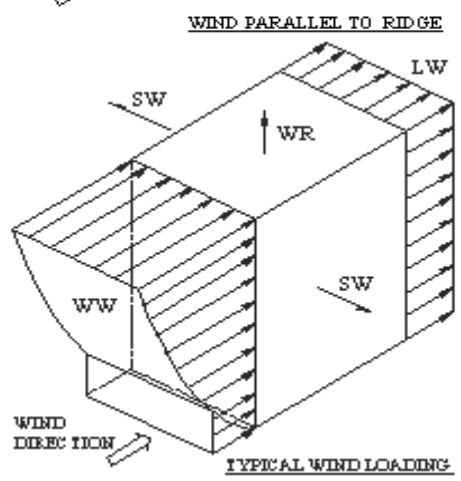

TYPICAL WIND LOADING

Parapet

z	Kz	Kzt	qp (psf)
0.0 ft	1.03	1.00	0.0

Windward parapet: 0.0 psf (GCpn = +1.5)
Leeward parapet: 0.0 psf (GCpn = -1.0)

Windward roof overhangs (add to windward roof pressure) : 55.2 psf (upward)

ASCE 7-16 Wind Component and Cladding One Story Wood Home No Modules (ASCE 7-16 Part 1 Pg 591)

MRH=	13.335	
Kzt =	1	
Kz =	1.03	ASCE 7-16 Table 26.10
Kd =	0.85	ASCE 7-16 Table 26.6-1
V =	190	
qz =	80.910208	psf
Gcpi =	0.18	ASCE 7-16 Figure 26.10-1

Note Pressures for one story no modules and one story wood with modules are the same b/c MRH <15'

GCp Values ASCE 7-16 Fig 30.4-2B

	10sf	50sf	100sf
NEG 1 & 2E	-2	-1.1	-0.5
NEG 2N, 2R, & 3E	-3	-2	-1.6
NEG 3R	-3.6	-2.4	-1.8
POS ALL	0.5	0.39	0.3
OVERHANG 1 & 2E	-2.5	-2.19	-1.9
OVERHANG 2N&2R	-3.5	-2.5	-2
OVERHANG 3E	-4.1	-2.8	-2.3
OVERHANG 3R	-4.7	-3	-2.3

Roof C&C Pressures

	10sf	50sf	100sf
NEG 1 & 2E	-176.4	-103.6	-55.0
NEG 2N, 2R, & 3E	-257.3	-176.4	-144.0
NEG 3R	-305.8	-208.7	-160.2
POS ALL	55.0	46.1	38.8
OVERHANG 1 & 2E	-216.8	-191.8	-168.3
OVERHANG 2N&2R	-297.7	-216.8	-176.4
OVERHANG 3E	-346.3	-241.1	-200.7
OVERHANG 3R	-394.8	-257.3	-200.7

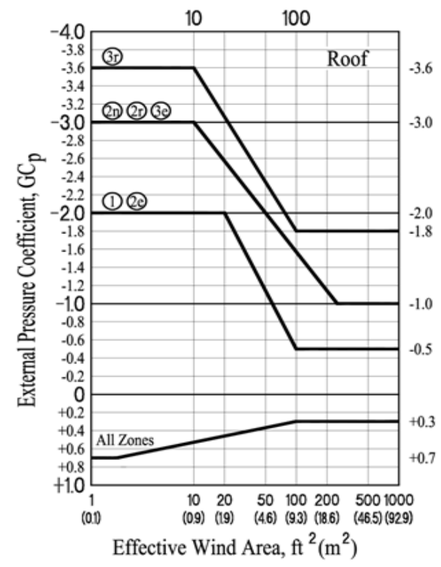

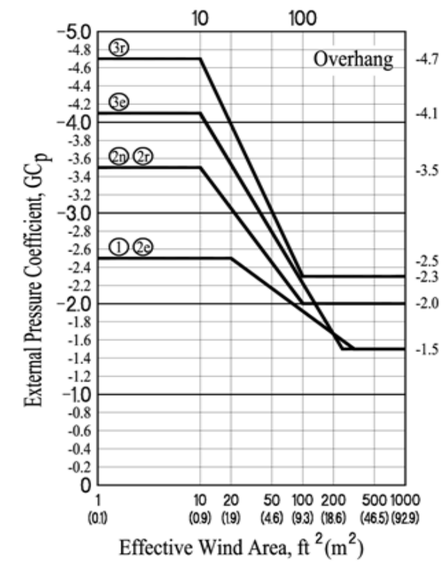

Wall GCp Values ASCE 7-16 Fig 30.4-1

	10sf	50sf	100sf
NEG 4	-1.1	-1	-0.9
NEG 5	-1.4	-1.18	-1.1
POS 4 & 5	1	0.9	0.8

Wall C & C Pressures

	10sf	50sf	100sf
NEG 4	-103.565	-95.474	-87.383
NEG 5	-127.838	-110.038	-103.565
POS 4 & 5	95.47405	87.38302	79.292

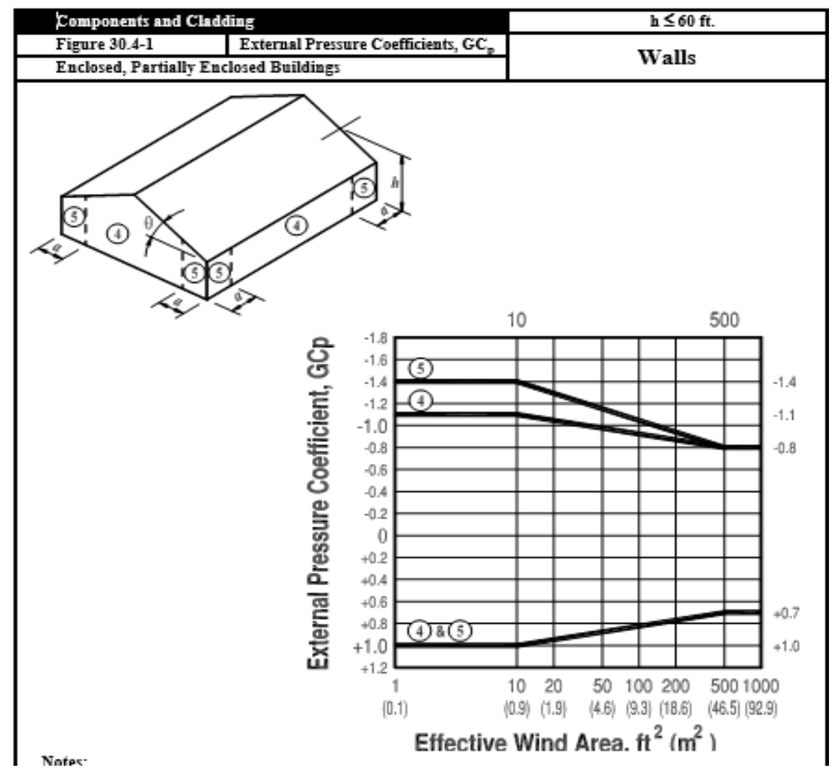

ASCE 7-16 Wind Component and Cladding One Story Wood Home With Modules (ASCE 7-16 Part 1 Pg 591)

MRH=	11.625	
Kzt =	1	
Kz =	1.03	ASCE 7-16 Table 26.10
Kd =	0.85	ASCE 7-16 Table 26.6-1
V =	190	
qz =	80.910208	psf
Gcpi =	0.18	ASCE 7-16 Figure 26.10-1

GCp Values ASCE 7-16 Fig 30.4-2B

	10sf	50sf	100sf
NEG 1 & 2E	-2	-1.1	-0.5
NEG 2N, 2R, & 3E	-3	-2	-1.6
NEG 3R	-3.6	-2.4	-1.8
POS ALL	0.5	0.39	0.3
OVERHANG 1 & 2E	-2.5	-2.19	-1.9
OVERHANG 2N&2R	-3.5	-2.5	-2
OVERHANG 3E	-4.1	-2.8	-2.3
OVERHANG 3R	-4.7	-3	-2.3

Roof C&C Pressures

	10sf	50sf	100sf
NEG 1 & 2E	-176.4	-103.6	-55.0
NEG 2N, 2R, & 3E	-257.3	-176.4	-144.0
NEG 3R	-305.8	-208.7	-160.2
POS ALL	55.0	46.1	38.8
OVERHANG 1 & 2E	-216.8	-191.8	-168.3
OVERHANG 2N&2R	-297.7	-216.8	-176.4
OVERHANG 3E	-346.3	-241.1	-200.7
OVERHANG 3R	-394.8	-257.3	-200.7

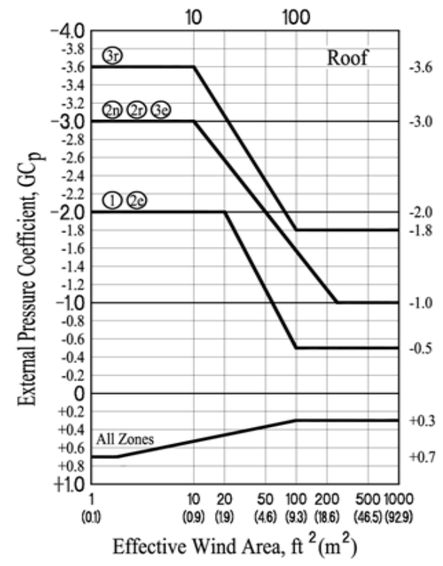

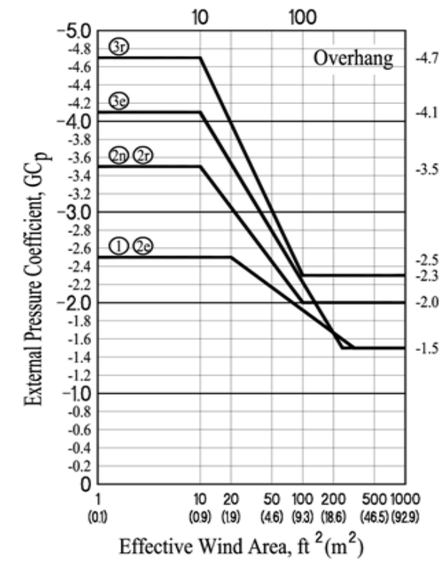

Wall GCp Values ASCE 7-16 Fig 30.4-1

	10sf	50sf	100sf
NEG 4	-1.1	-1	-0.9
NEG 5	-1.4	-1.18	-1.1
POS 4 & 5	1	0.9	0.8

Wall C & C Pressures

	10sf	50sf	100sf
NEG 4	-103.565	-95.474	-87.383
NEG 5	-127.838	-110.038	-103.565
POS 4 & 5	95.47405	87.38302	79.292

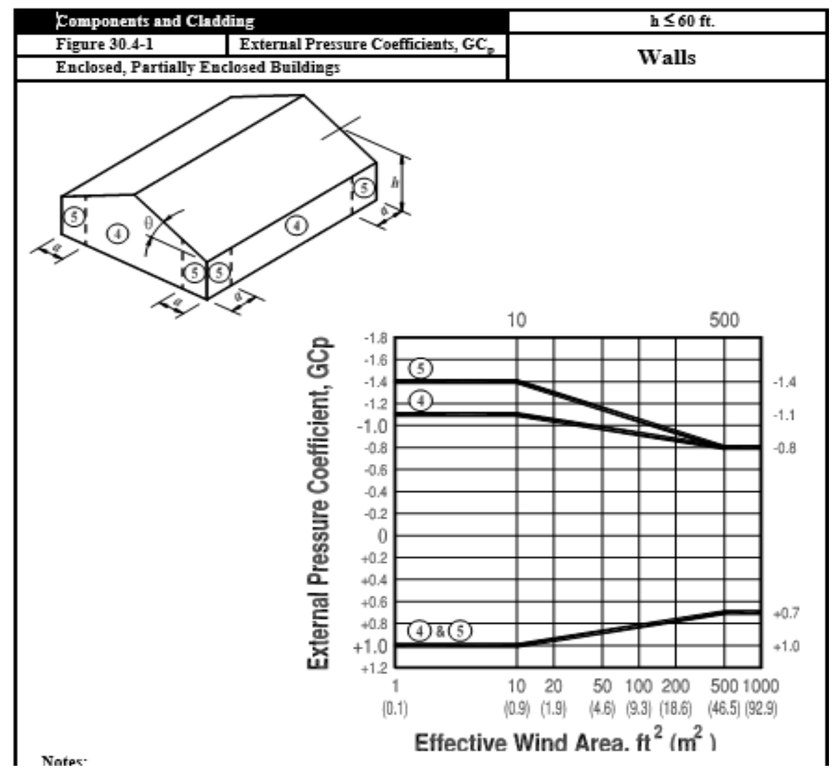

STARR II

PR Prescriptive Homes Calculations

JOB TITLE	PR Homes: One Story Wood House		
JOB NO.		**SHEET NO.**	
CALCULATED BY	SW	**DATE**	2/6/20
CHECKED BY	MH	**DATE**	2/6/20

ASD WIND PRESSURES								
	Windward Wall Pressures at "z" (psf)						Combined WW + LW	
				Windward Wall			Normal	Parallel
	z	Kz	Kzt	qzGCp	w/+qiGCpi	w/-qhGCpi	to Ridge	to Ridge
	0 to 15'	1.0	1.0	55.0	24.3	41.8	53.7	52.1
h=	15.25	1.0	1.0	55.2	24.3	41.9	53.8	52.2
ridge =	16.9	1.1	1.0	56.2	24.9	42.5	54.4	52.8

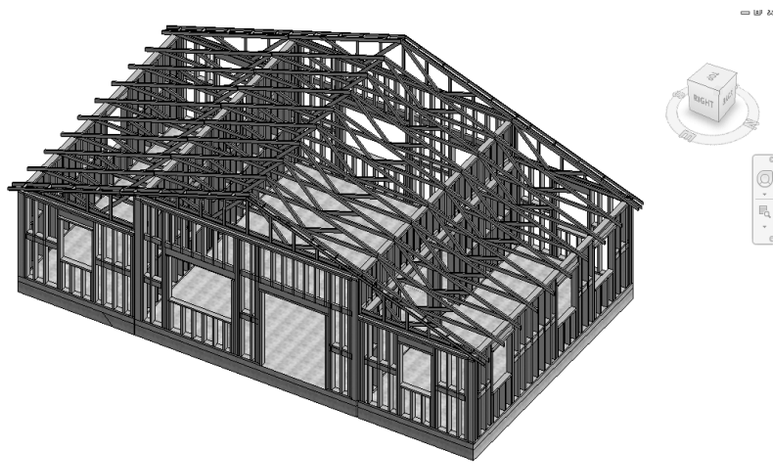

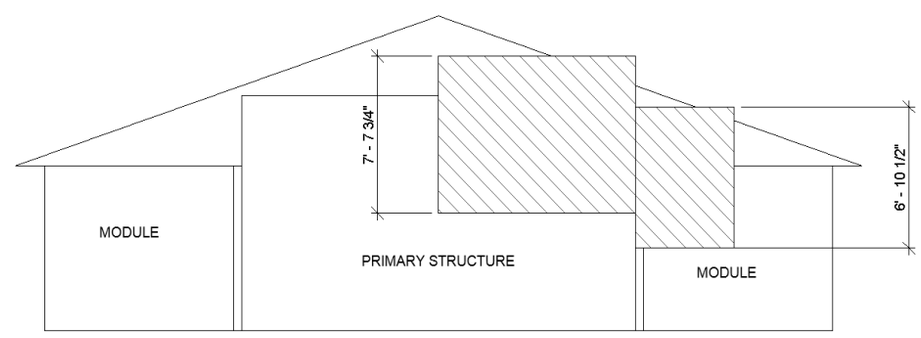

TRIBUTARY FOR SHEAR WALL WIND PARALLEL TO RIDGE

Roof Diaphragm Load Primary Structure Wind Parallel to Ridge:

B =	44	ft	o/o
Wall Ht. =	11.40	ft	
Wall Ht. Module =	8.00	ft	
Roof Ht. =	15.29	ft	
Roof Ht. Avg =	13.35	ft	
Roof Ht. Avg Module =	10.88	ft	
Diaphragm Trib Area/ft =	7.65	Ft^2/ft	
Diaphragm Trib Area/ft module =	6.88	Ft^2/ft	
Diaphragm Load/ft Main =	399	lb/ft	
Diaphragm Load/ft Module =	359	lb/ft	
Diaphragm Shear/Ft =	274	lb/ft	Note: Diaphragm transfers load to two adjacent shear walls
Wall Shear 24' Wall Primary	3988	lb	
Wall Shear 24' Wall Module	1793	lb	
Diaphragm Moment =	96500	lb*ft	
Diaphragm Chord T/C =	3860	lbs	
Diaphragm Chord T/C per ft =	88	lbs/ft	Doesn't control

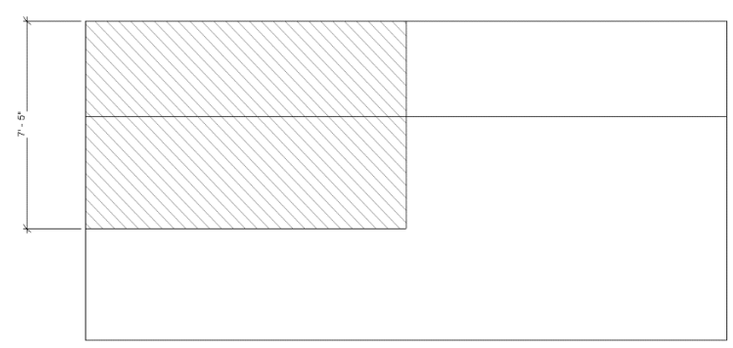

Roof Diaphragm Load Primary Structure Wind Perpendicular to Ridge:

B =	25	ft	o/o
Wall Ht. =	8.00	ft	
Roof Ht. =	15.29	ft	
Roof Ht. Avg =	11.42	ft	
Diaphragm Trib Area/ft =	7.42	Ft^2/ft	
Diaphragm Load/ft =	399	lb/ft	
Diaphragm Total Shear/ft =	238	lb/ft	
Wall Shear 20' Wall =	4991	lbs	ASD
Wall Shear 10' Module Wall =	3681	lbs	
Diaphragm Moment =	31193	lb*ft	
Diaphragm Chord T/C =	709	lbs	
Diaphragm Chord T/C per ft =	28	lbs/ft	Doesn't control

TRIBUTARY FOR SHEAR WALL WIND PERPENDICULAR TO RIDGE

JOB TITLE	PR Homes: One Story Wood House
JOB NO.	
SHEET NO.	
CALCULATED BY	SW
DATE	2/6/20
CHECKED BY	MH
DATE	2/6/20

Seismic Forces			
Cs =	0.14		
Wall Weight =	20.00	psf	
Wal Avg Height =	11.65	ft	
Wall Seismic Wt. =	2.77	psf	Doesn't Control
Ss =	1.35		
S1 =	0.53		
Sms =	1.35		
Sm1 =	0.80		
Sds =	0.90		
Sd1 =	0.53		
Cs =	0.14		
Seismic Weight =	33.94	kips	
Seismic Base Shear =	4.72	kips	
Seismic Weight Module =	16.64	kips	
Seismic Base Shear =	2.32	kips	
Fpx Diaphragm Min = 0.2*Sds*Ie*w =	0.18		
By Inspection Doesn't Control			
Wall Anchorage Min = 0.4Sds*ka*Ie*Wp =	0.515		
Wall Anchorage Design Pressure =	10.3	psf	Doesn't Control

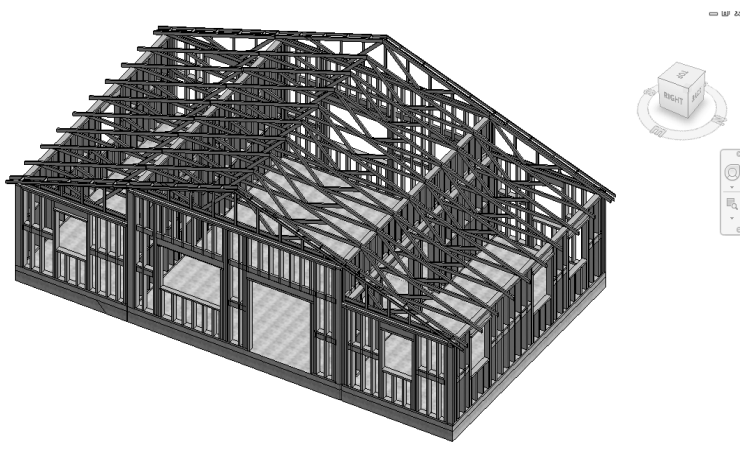

STARR II

PR Prescriptive Homes Calculations

JOB TITLE	PR Homes: One Story Wood House		
JOB NO.		SHEET NO.	
CALCULATED BY	SW	DATE	2/6/20
CHECKED BY	MH	DATE	2/6/20

Roof Uplift Fastener Design C&C

ASD Wind Uplift C & C Load =	236	psf	
Spacing =	3	in	Ok to do 6" interior spacing
Trib =	0.5	sq ft	
Uplift on fastener (ASD)=	118.2	lbs	
Shear on fastnener (ASD) per foot =	238	lbs	
Shear on fastnener (ASD) =	59.41508347	lbs	

BY INSPECTION NAILS WILL NOT WORK (UPLIFT VALUES AROUND 30lbs/in PENETRATION)
TRY # 12 SCREW

From Table 12.2 B			
W =	186	lbs/in pen	g = 0.55
Cd =	1.6		
W' =	297.6	lbs/in pen	
From Table 12L			
Z =	133	lbs (10*0.216" pen = 2.16" pen (3" screw)	
Z' =	212.8	lbs	
penetration into main member p =	2.28	in	Actual Penetration with 3" screw
Angle between wood surface and applied load =	-63.31	deg	greater than required 2.16" pen
Angle between wood surface and applied load radians=	-1.11		
ASD Allowable Combined Lateral and Withdrawl Loading (Z_a') 12.4.2 =	470.9	lbs	OK > 132 lbs

Table 12.2B Cut Thread or Rolled Thread Wood Screw Reference Withdrawal Design Values, W[1]

Tabulated withdrawal design values, W, are in pounds per inch of thread penetration into side grain of wood member (see 12.2.2.1).

Specific Gravity, G[2]	Wood Screw Number 6	7	8	9	10	12	14	16	18	20	24
0.73	209	229	249	268	288	327	367	406	446	485	564
0.71	198	216	235	254	272	310	347	384	421	459	533
0.68	181	199	216	233	250	284	318	352	387	421	489
0.67	176	193	209	226	243	276	309	342	375	409	475
0.58	132	144	157	169	182	207	232	256	281	306	356
0.55	119	130	141	152	163	186	208	231	253	275	320
0.51	102	112	121	131	141	160	179	198	217	237	275
0.50	98	107	117	126	135	154	172	191	209	228	264
0.49	94	103	112	121	130	147	165	183	201	219	254
0.47	87	95	103	111	119	136	152	168	185	201	234
0.46	83	91	99	107	114	130	146	161	177	193	224
0.44	76	83	90	97	105	119	133	148	162	176	205
0.43	73	79	86	93	100	114	127	141	155	168	196
0.42	69	76	82	89	95	108	121	134	147	161	187
0.41	66	72	78	85	91	103	116	128	141	153	178
0.40	63	69	75	81	86	98	110	122	134	146	169
0.39	60	65	71	77	82	93	105	116	127	138	161
0.38	57	62	67	73	78	89	99	110	121	131	153
0.37	54	59	64	69	74	84	94	104	114	125	145
0.36	51	56	60	65	70	80	89	99	108	118	137
0.35	48	53	57	62	66	75	84	93	102	111	130
0.31	38	41	45	48	52	59	66	73	80	87	102

Table 12L WOOD SCREWS: Reference Lateral Design Values, Z, for Single Shear (two member) Connections[1,2,3]

for sawn lumber or SCL with both members of identical specific gravity (tabulated lateral design values are calculated based on an assumed length of wood screw penetration, p, into the main member equal to 10D)

Side Member Thickness t_s in.	Wood Screw Diameter D in.	Wood Screw Number	G=0.67 Red Oak lbs.	G=0.55 Mixed Maple Southern Pine lbs.	G=0.5 Douglas Fir-Larch lbs.	G=0.49 Douglas Fir-Larch(N) lbs.	G=0.46 Douglas Fir(S) Hem-Fir(N) lbs.	G=0.43 Hem-Fir lbs.	G=0.42 Spruce-Pine-Fir lbs.	G=0.37 Redwood (open grain) lbs.	G=0.36 Eastern Softwoods Spruce-Pine-Fir(S) Western Cedars Western Woods lbs.	G=0.35 Northern Species lbs.
1/2	0.138	6	88	67	59	57	53	49	47	41	40	38
	0.151	7	96	74	65	63	59	54	52	45	44	42
	0.164	8	107	82	73	71	66	61	59	51	50	48
	0.177	9	121	94	83	81	76	70	68	59	58	56
	0.190	10	130	101	90	87	82	75	73	64	63	60
	0.216	12	156	123	110	107	100	93	91	79	78	75
	0.242	14	168	133	120	117	110	102	99	87	86	83
5/8	0.138	6	94	76	66	64	60	53	52	44	43	41

WITHDRAWL AND SHEAR VALUES FOR SCREWS IN WOOD SHEATHING

NOTE: using lesser value of 15/32" when 23/32" sheathing provided

12.4.1 Lag Screws and Wood Screws

Where a lag screw or wood screw is subjected to combined lateral and withdrawal loading, as when the fastener is inserted perpendicular to the fiber and the load acts at an angle, α, to the wood surface (see Figure 12F), the adjusted design value, Z_α', shall be determined as follows (see Appendix J):

$$Z_\alpha' = \frac{(W'p)Z'}{(W'p)\cos^2\alpha + Z'\sin^2\alpha} \qquad (12.4\text{-}1)$$

where:

α = angle between the wood surface and the direction of applied load, degrees

p = length of thread penetration into the main member, in.

12.4.2 Nails and Spikes

Where a nail or spike is subjected to combined lateral and withdrawal loading, as when the nail or spike is inserted perpendicular to the fiber and the load acts at an angle, α, to the wood surface, the adjusted design value, Z_α', shall be determined as follows:

WOOD SCREWS LOADED AT AN ANGLE I

$$Z_\alpha' = \frac{(W'p)Z'}{(W'p)\cos\alpha + Z'\sin\alpha} \qquad (12.4\text{-}2)$$

where:

α = angle between the wood surface and the direction of applied load, degrees

p = length of fastener penetration into the main member, in.

Figure 12F Combined Lateral and Withdrawal Loading

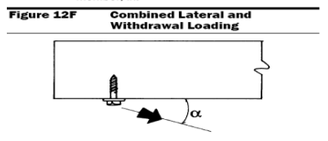

WOOD SCREWS LOADED AT AN ANGLE II

Cases 1&3:Continuous Panel Joints Perpendicular to Framing	
Long Panel Direction Perpendicular to Supports	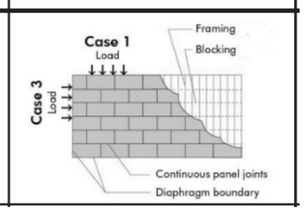

SHEATHING ORIENTATION

Sheathing Design for Shear Sheathing Perpendicular to Trusses
Case 1 Wind Parallel to Ridge

ASD Wind Load/ft =	274	lb/ft	
Nominal Wind Load/ft =	548	lb/ft	
L =	44	ft	
W =	25	ft	
L/W Ratio =	1.76	OK < 4:1 Blocked Diaphragm per NDS Table 4.2.4	
Supports at 3" on center sheathing capacity from Table 4.2A 15/32" =	1010	lbs/ft	OK> 548 lb/ft

Ok to use table values for 15/32" when actual sheathing provided is 23/32" and will provide higher capacity
NOTE SAME SPACING FOR CASE 1 & 3

ASD MWFRS Uplift =	35.72843111	psf	
Applied Uplift ASD Capacity =	240	psf	
Span =	2	ft	
Fb*S (4 PLY) 48/24 =	930	lb in/ft	
wb allowable = 120*Fb*S*Cd/Span^2 (Three Span)	310	psf	OK> 35.72843 psf
Combined Utilization Ratio =	0.657988006		OK> 1

Sheathing Uplift C & C Bending check

Applied Uplift ASD =	240	psf	
Span =	2	ft	
Fb*S (4 PLY) 48/24 =	1000	lb in/ft	
wb allowable = 120*Fb*S*Cd/Span^2 (Three Span)	333.3333333	psf	OK> 240 psf

Panel Vert Shear C & C Check

ASD Shear in the plane Fs	250	lbs/ft	
Structural 1 multiplier =	1		
Cd =	1.6		
wb = 20Fs/span =	333.3333333	psf	OK > 240 psf

Blocking Connection Into Wall

TRY A34 at 0'-6" O.C.		
Shear ASD demand =	137.04	lb
Uplift Demand =	-87.04	lb
Shear capacity =	640	lb
Uplift Capacity =	240	lb
Combined Utilization =	0.576794884	OK

Truss Tiedowns Uplift

Uplift (ASD) at top plate =	1386	lbs	
(2) MTS 12 uplift =	1980	lbs	OK

Screw Head Pull Through

W =	171	lbs	
Cd =	1.6		
W' =	273.6	lbs	OK > 118.2 lbs Works for 6" spacing also

Framing Angles and Plates (cont.)

These products are available with additional corrosion protection. For more information, see p. 15. SS For stainless-steel fasteners, see p. 21. SD Many of these products are approved for installation with Strong-Drive® SD Connector screws. See pp. 335–337 for more information.

Model No.	Type of Connection	Fasteners (in.)	Direction of Load	DF/SP Allowable Loads Floor (100)	Roof (125)	(160)	SPF/HF Allowable Loads Floor (100)	Roof (125)	(160)	Code Ref.
SS A34	1	(8) 0.131 x 1½	F_1	395	480	545	340	415	480	IBC, FL, LA
			F26	395	430	430	340	370	370	
	1	(8) #9 x 1½ SD	F_1	640	640	640	550	550	550	
			F_2	495	495	495	425	425	425	
			Uplift	240	240	240	170	170	170	—

A34 FRAMING ANGLES

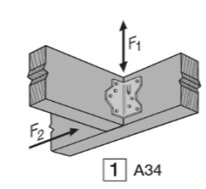

For a three-span condition:

$$w_s = \frac{20\,F_s(lb/Q)}{\ell_2}$$

Where:

w_s = uniform load based on shear strength (psf)
$F_s(lb/Q)$ = design shear strength capacity (lbf/ft)
ℓ_2 = clear span (in., center-to-center of supports minus support width)

For a three-span condition:

$$w_b = \frac{120\,F_bS}{\ell_1^2}$$

Where:

w_b = uniform load based on bending strength (psf)
F_bS = design bending strength capacity (lbf-in./ft)
ℓ_1 = span (in., center-to-center of supports)

SHEATHING CAPACITY FORMULAS

SUMMARY	
Boundary Sheathing Nailing	#12 3" screw at 3" on center
Interior Sheathing Nailing	#12 3" screw at 6" on center
Blocking Type	3" x 6" at all panel edges
Blocking Nailing into Wall	A34 at 6" o.c. with (8) no 9 1.5"
Truss to Top Plate Conn	(2) MTS 12/MTS 30
OSB 48/24 span rating 23/32" sheathing	
Fy screw =	80000 psi

RATED PANELS DESIGN CAPACITIES

Span Rating	Stress Parallel to Strength Axis: Plywood 3-ply	Plywood 4-ply	Plywood 5-ply	OSB	Stress Perpendicular to Strength Axis: Plywood 3-ply	Plywood 4-ply	Plywood 5-ply	OSB
PANEL BENDING STIFFNESS, EI (lbf-in.²/ft of panel width)								
24/0	66,000	66,000	66,000	60,000	3,600	7,900	11,000	11,000
24/16	86,000	86,000	86,000	78,000	5,200	11,500	16,000	16,000
32/16	125,000	125,000	125,000	115,000	8,100	18,000	25,000	25,000
40/20	250,000	250,000	250,000	225,000	18,000	39,500	56,000	56,000
48/24	NA	440,000	440,000	400,000	NA	65,000	91,500	91,500
16 oc	165,000	165,000	165,000	150,000	11,000	24,000	34,000	34,000
20 oc	230,000	230,000	230,000	210,000	13,000	28,500	40,500	40,500
24 oc	NA	330,000	330,000	300,000	NA	57,000	80,500	80,500
32 oc	NA	NA	715,000	650,000	NA	NA	235,000	235,000
48 oc	NA	NA	1,265,000	1,150,000	NA	NA	495,000	495,000
Structural I Multiplier	1.0	1.0	1.0	1.0	1.5	1.5	1.6	1.6
PANEL BENDING STRENGTH, F_bS (lbf-in./ft of panel width)								
24/0	250	275	300	300	54	65	97	97
24/16	320	350	385	385	64	77	115	115
32/16	370	405	445	445	92	110	165	165
40/20	625	690	750	750	150	180	270	270
48/24	NA	930	1,000	1,000	NA	270	405	405
16 oc	415	455	500	500	100	120	180	180
20 oc	480	530	575	575	140	170	250	250
24 oc	NA	705	770	770	NA	260	385	385
32 oc	NA	NA	1,050	1,050	NA	NA	685	685
48 oc	NA	NA	1,900	1,900	NA	NA	1,200	1,200

Span Rating	Stress Parallel to Strength Axis: Plywood 3-ply	Plywood 4-ply	Plywood 5-ply	OSB	Stress Perpendicular to Strength Axis: Plywood 3-ply	Plywood 4-ply	Plywood 5-ply	OSB
PANEL AXIAL STIFFNESS, EA (lbf/ft of panel width)								
24/0	3,350,000	3,350,000	3,350,000	3,350,000	2,900,000	2,900,000	2,900,000	2,500,000[a]
24/16	3,800,000	3,800,000	3,800,000	3,800,000	2,900,000	2,900,000	2,900,000	2,700,000[a]
32/16	4,150,000	4,150,000	4,150,000	4,150,000	3,600,000	3,600,000	3,600,000	2,700,000
40/20	5,000,000	5,000,000	5,000,000	5,000,000	4,500,000	4,500,000	4,500,000	2,900,000[b]
48/24	NA	5,850,000	5,850,000	5,850,000	NA	5,000,000	5,000,000	3,300,000[b]
16 oc	4,500,000	4,500,000	4,500,000	4,500,000	4,200,000	4,200,000	4,200,000	2,700,000
20 oc	5,000,000	5,000,000	5,000,000	5,000,000	4,500,000	4,500,000	4,500,000	2,900,000[b]
24 oc	NA	5,850,000	5,850,000	5,850,000	NA	5,000,000	5,000,000	3,300,000[b]
32 oc	NA	NA	7,500,000	7,500,000	NA	NA	7,300,000	4,200,000
48 oc	NA	NA	8,200,000	8,200,000	NA	NA	7,300,000	4,600,000
Structural I Multiplier	1.0	1.0	1.0	1.0	1.0	1.0	1.0	1.0
PANEL SHEAR IN THE PLANE, F_s(lb/Q) (lbf/ft of panel width)								
24/0	155	155	170	130	275	375	130	130
24/16	180	180	195	150	315	435	150	150
32/16	200	200	215	165	345	480	165	165
40/20	245	245	265	205	430	595	205	205
48/24	NA	300	325	250	NA	725	250	250
16 oc	245	245	265	205	430	595	205	205
20 oc	245	245	265	205	430	595	205	205
24 oc	NA	300	325	250	NA	725	250	250
32 oc	NA	NA	390	300	NA	NA	300	300
48 oc	NA	NA	500	385	NA	NA	385	385

APA PANEL CAPACITY

Table A
Wood Structural Panel Design Capacities Based on Span Ratings[a]

Span Rating		Strength: Bending F_bS (lb-in/ft of width)		Axial Tension F_tA (lb/ft of width)		Axial Compression F_cA (lb/ft of width)		Shear through the thickness[b,c] F_vt_v (lb/in of shear-resisting panel length)	Planar Shear: Planar Shear F_s (lb/Q) (lb/ft of width)		Stiffness and Rigidity: Bending EI (lb-in²/ft of width)		Axial EA (lb/ft of width x 10^6)		Rigidity through the thickness G_vt_v (lb/in of panel depth)
		Capacities relative to strength axis[d]													
		0°	90°	0°	90°	0°	90°	0° / 90°	0°	90°	0°	90°	0°	90°	0° / 90°
Sheathing Span[e]															
24/0	3-ply	250	54	2,300	600	2,850	2,500	53	156	273	66,000	3,600	3.35	2.90	25,000
32/16	3-ply	370	92	2,800	1,250	3,550	3,100	62	198	347	126,500	8,100	4.15	3.60	27,000
	4-ply	407	110	2,800	1,250	5,325	4,650	81	198	479	126,500	17,820	4.15	3.60	35,100
	5-ply	444	166	3,640	1,625	5,325	4,650	93	215	165	126,500	25,110	4.15	3.60	40,500
40/20	3-ply	625	150	2,900	1,600	4,200	4,000	68	246	431	247,500	18,000	5.00	4.50	28,500
	4-ply	688	180	2,900	1,600	6,300	6,000	88	246	595	247,500	39,600	5.00	4.50	37,050
	5-ply	750	270	3,770	2,080	6,300	6,000	102	267	205	247,500	55,800	5.00	4.50	42,750
48/24	4-ply	930	270	4,000	1,950	7,500	7,200	98	300	725	440,000	64,900	5.85	5.00	40,300
	5-ply	1,014	405	5,200	2,535	7,500	7,200	113	325	250	440,000	91,450	5.85	5.00	46,500

APA WOOD PANEL SHEAR CAPACITIES

Model No.	Strap Length (in.)	Total Quantity of Fasteners: 0.148" x 3" Nails	0.148" x 1½" Nails	DF/SP Allowable Uplift Loads (160): 0.148" x 3" Nails	0.148" x 1½" Nails	SPF/HF Allowable Uplift Loads (160): 0.148" x 3" Nails	0.148" x 1½" Nails	Code Ref.
LTS12	12	12	12	660	600	570	515	IBC, FL, LA
LTS16	16							
LTS20	20							
MTS12	12	14	14	990	990	850	850	
MTS16	16							
MTS20	20							
MTS30	30							
MTS24C	24							FL
MTS30C	30							
HTS16	16	16	16	1,310	1,310	1,125	1,125	IBC, FL, LA
HTS20	20	20	24	1,310	1,310	1,125	1,125	
HTS24	24							
HTS30	30							
HTS30C	30							

MTS STRAP CAPACITY

Copyright © American Wood Council. Downloaded/printed pursuant to License Ag

Table 4.2A Nominal Unit Shear Capacities for Wood-Frame Diaphragms

Blocked Wood Structural Panel Diaphragms[1,2,3,4,5]

Sheathing Grade	Common Nail Size	Minimum Fastener Penetration in Framing Member or Blocking (in.)	Minimum Nominal Panel Thickness (in.)	Minimum Nominal Width of Nailed Face at Adjoining Panel Edges and Boundaries (in.)	A SEISMIC												B WIND			
					Nail Spacing (in.) at diaphragm boundaries (all cases), at continuous panel edges parallel to load (Cases 3 & 4), and at all panel edges (Cases 5 & 6)												Nail Spacing (in.) at diaphragm boundaries (all cases), at continuous panel edges parallel to load (Cases 3 & 4), and at all panel edges (Cases 5 & 6)			
					6			4			2-1/2			2			6	4	2-1/2	2
					Nail Spacing (in.) at other panel edges (Cases 1, 2, 3, & 4)												Nail Spacing (in.) at other panel edges (Cases 1, 2, 3, & 4)			
					6			6			4			3			6	6	4	3
					v_s (plf)	G_a (kips/in.)		v_s (plf)	G_a (kips/in.)		v_s (plf)	G_a (kips/in.)		v_s (plf)	G_a (kips/in.)		v_w (plf)	v_w (plf)	v_w (plf)	v_w (plf)
						OSB	PLY		OSB	PLY		OSB	PLY		OSB	PLY				
Structural I	6d	1-1/4	5/16	2	370	15	12	500	8.5	7.5	750	12	10	840	20	15	520	700	1050	1175
				3	420	12	9.5	560	7.0	6.0	840	9.5	8.5	950	17	13	590	785	1175	1330
	8d	1-3/8	3/8	2	540	14	11	720	9.0	7.5	1060	13	10	1200	21	15	755	1010	1485	1680
				3	600	12	10	800	7.5	6.5	1200	10	9.0	1350	18	13	840	1120	1680	1890
	10d	1-1/2	15/32	2	640	24	17	850	15	12	1280	20	15	1460	31	21	895	1190	1790	2045
				3	720	20	15	960	12	9.5	1440	16	13	1640	26	18	1010	1345	2015	2295
Sheathing and Single-Floor	6d	1-1/4	5/16	2	340	15	10	450	9.0	7.0	670	13	9.5	760	21	13	475	630	940	1065
				3	380	12	9.0	500	7.0	6.0	760	10	8.0	860	17	12	530	700	1065	1205
			3/8	2	370	13	9.5	500	7.0	6.0	750	10	8.0	840	18	12	520	700	1050	1175
				3	420	10	8.0	560	5.5	5.0	840	8.5	7.0	950	14	10	590	785	1175	1330
	8d	1-3/8	3/8	2	480	15	11	640	9.5	7.5	960	13	9.5	1090	21	13	670	895	1345	1525
				3	540	12	9.5	720	7.5	6.0	1080	11	8.5	1220	18	12	755	1010	1510	1710
			7/16	2	510	14	10	680	8.5	7.0	1010	12	9.5	1150	20	13	715	950	1415	1610
				3	570	11	9.0	760	7.0	6.0	1140	10	8.0	1290	17	12	800	1065	1595	1805
			15/32	2	540	13	9.5	720	7.5	6.5	1060	11	8.5	1200	19	13	755	1010	1485	1680
				3	600	10	8.5	800	6.0	5.5	1200	9.0	7.5	1350	15	11	840	1120	1680	1890
	10d	1-1/2	15/32	2	580	25	15	770	15	11	1150	21	14	1310	33	18	810	1080	1610	1835
				3	650	21	14	860	12	9.5	1300	17	12	1470	28	16	910	1205	1820	2060
			19/32	2	640	21	14	850	13	9.5	1280	18	12	1460	28	17	895	1190	1790	2045
				3	720	17	12	960	10	8.0	1440	14	11	1640	24	15	1010	1345	2015	2295

TABLE 4.2A SHEATHING SHEAR CAPACITIES

Top Plate Chord Design

Max Chord Tension/Compression =	3860	lbs	
Ft =	675	psi	Controls because fully braced
Fc =	1450	psi	By inspection Ok for wall shear force
Cd =	1.6		
As pro (2) 2 x 6 =	16.5	in^2	
F't =	1080	psi	
F't allowable tension =	17820	lbs	OK > 3860 lbs

Top Plate Splice Design

Assuming splice is at a position that has to tranfer full tension/compresson or full shear			
Max Chord Tension/Compression =	3860	lbs	
Wall Shear =	4991	lbs	Controls
Try MST72 Strap			
Allowable Tension	6730	lbs	OK> 4991

	18	(46) 0.162 x 2½	6,235	5,405
MST72	30	(48) 0.162 x 2½	6,505	5,640
	24	(54) 0.162 x 2½	6,730	6,345
	18	(62) 0.162 x 2½	6,730	6,475

See footnotes below.

MST72 ALLOWABLE TENSION

Wall Out of Plane Stud Design

ASD Wall Design Pressure =	76.8	psf	
2" x 6" Stud Spacing =	1.0	ft	
ASD Load/stud =	76.80	lb/ft	
Controlling Stud Ht. =	11.42	ft	
ASD Wind Moment =	1252.00	ft*lb	
2 x 6 Section Modulus =	7.56	in^3	
Applied Stress =	1987.30	psi	
Cd * Cr =	1.84		
Fb southern yellow pine =	1100	psi	
F'b =	2024	psi	OK > 1987.298
I stud =	20.8	in^4	
E stud =	1100000	psi	
Deflection =	0.642276657	in	
Allowable deflection L/180 =	0.761333333	in	OK

Wall Out of Plane Fastener Withdrawl (side walls positive pressure)

Try 3" spacing s =	3		
Ae =	1.0	sf	
C&C Wind Pressure =	-160.7	psf	
Applied Withdrawl =	-160.7	lbs	
Max ASD Fastener Shear =	274	lbs	
Max ASD Fastener Shear Per Fastener =	68.52029411	lbs	
Max combined ASD Fastener load =	317.7179997	lbs	
Use 3" #12 screw at 3" on center interor and edges capacity =	470.868884	lbs	OK SEE Roof Design Tab OK to do 6" SPACING for Interior Conn.

Wall In Plane Design Using Segmented Shear Wall Method

Max Wall Shear 20' wall =	4991	lb/ft
Max Wall Shear 24' wall =	1793	lbs

SHEAR WALL 20' WITH DOOR AND 6' WINDOW
See "20' Shear Wall Design" Tab
SHEAR WALL 20' WITH 6' AND 3' WINDOW
See "20' Shear Wall Design" Tab
SHEAR WALL 24' WITH 12' OPENING AND 3' WINDOW
See "24' Shear Wall Design" Tab

Stud Connection to Top Plate/Sill Plate

Uplift =	-49.737458	psf
Stud Spacing =	1	ft
Uplift per stud =	-328.2672228	
Roof Weight x 0.6 =	153.84	lb/ft
Wall Weight x 0.6 =	49.5	lb/ft
Total Uplift =	-124.9272228	lb
USE TSP ANCHOR BOTTOM OF STUDS TSP ANCHOR TOP OF STUDS ALLOWABLE UPLIFT = 755 LBS		

Sill Plate Attachment to Foundation
See Shear Wall Design Tabs

Stud Connection to Top Plate/Sill Plate at Opening and Header Straps

Largest Opening =	12	ft	
Uplift at window jack/king studs =	-1969.603337	lb	
Six foot opening uplift =	-984.8016683	lb	
Dead load =	480		
Required uplift capacity at six foot opening =	-504.8016683	lbs	
Required uplift capacity at twelve foot opening =	-1009.603337	lbs	
USE MSTA 30 strap around 6 foot openings CAPACITY =	2050	lbs	OK
Use CS16 strap	1325	lbs	OK

LSTA30	18	1¼	30	(22) 0.148 x 2½	1,640	1,640
LSTA36		1¼	36	(24) 0.148 x 2½	1,640	1,640
MSTA9		1¼	9	(8) 0.148 x 2½	750	650
MSTA12		1¼	12	(10) 0.148 x 2½	940	810
MSTA15		1¼	15	(12) 0.148 x 2½	1,130	970
MSTA18		1¼	18	(14) 0.148 x 2½	1,315	1,135
MSTA21		1¼	21	(16) 0.148 x 2½	1,505	1,295
MSTA24		1¼	24	(18) 0.148 x 2½	1,640	1,460
MSTA30		1¼	30	(22) 0.148 x 2½	2,050	1,825

MSTA30 ALLOWABLE TENSION

Holddown Requirements
See Shear Wall Design Tabs

Note wall sheathing is ok for out of plane loads because roof pressures are higher and spans are greater for the same sheathing.

Model No.	Dimensions (in.) W	Dimensions (in.) L	Stud	Plate Width	Fasteners (in.) Stud[1]	Fasteners (in.) Plate	Allowable Uplift Loads DF/SP Side 8 (160)	Allowable Uplift Loads DF/SP Center 9 (160)	Allowable Uplift Loads SPF/HF Side 8 (160)	Allowable Uplift Loads SPF/HF Center 9 (160)	Code Ref.
SP1	3½	5 1/16	2x	—	(6) 0.148 x 3	(4) 0.148 x 3	555	555	535	535	IBC, FL, LA
SP2	3½	6⅝	2x	—	(6) 0.148 x 3	(6) 0.148 x 3	1,010	1,010	605	605	
SP4	3 9/16	7¼	2x	4x	(6) 0.148 x 1½	—	415	825	355	710	
SP6	5 9/16	7¾	2x	6x	(6) 0.148 x 1½	—	415	825	355	710	
SP8	7 5/16	8 5/16	2x	8x	(6) 0.148 x 1½	—	415	825	355	710	
SPH4	3 9/16	8¾	2x	4x	(10) 0.148 x 1½	—	520	1,040	450	895	
					(12) 0.148 x 1½	—	640	1,280	550	1,100	
SPH6	5 9/16	9¼	2x	6x	(10) 0.148 x 1½	—	520	1,040	450	895	
					(12) 0.148 x 1½	—	640	1,280	550	1,100	
SPH8	7 5/16	8⅜	2x	8x	(10) 0.148 x 1½	—	520	1,040	450	895	
					(12) 0.148 x 1½	—	640	1,280	550	1,100	
RSP4 (1)	2⅛	4½	2x	—	(4) 0.131 x 1½	(4) 0.131 x 1½	245	245	285	285	
RSP4 (2)	2⅛	4½	2x	—	(4) 0.131 x 1½	(4) 0.131 x 1½	390	390	370	370	
CS20	1¼	24	2x	—	(6) 0.148 x 1½	—	—	550	—	475	
				—	(10) 0.148 x 1½	—	—	915	—	790	
CS16	1¼	26	2x	—	(12) 0.148 x 1½	—	—	1,135	—	980	
				—	(14) 0.148 x 1½	—	—	1,325	—	1,140	

1. See pp. 260–261 for Straps and Ties General Notes.

CS16 STUD PLATE TIES

Headers

Per WFCM three 2" x 8" headers can span	6.82	ft
Dist from top plate to header max =	4.095	ft
Dist from sill plate to bottom of window =	3	ft
x =	4.095	
wall height h =	11.42	ft
x/h =	0.358581436	
Number of full head studs required for 6 foot	3	
Number of full head studs required for 3 foot	2	

Blocking to Stud

Withdrawl C & C pressure =	-160.7	psf	
Trib =	4	sf	
Withdrawl Pressure =	-642.7968392		
Try 3 connectors each end			
Connector Applied Shear =	-107.1328065		
10d box Z =	93	lbs	
Cd =	1.6		
Ctn =	0.83		
Z' =	123.504	lbs	OK

Stud Plate Ties (cont.)

These products are available with additional corrosion protection. For more information, see p. 15.

Model No.	Dimensions (in.) W	Dimensions (in.) L	Fasteners (in.) Studs	Fasteners (in.) Double Top Plate	Fasteners (in.) Single Sill Plate	Allowable Uplift Loads (160) Double Top Plate DF/SP/SPF	Allowable Uplift Loads (160) Single Sill Plate DF/SP	Allowable Uplift Loads (160) Single Sill Plate SPF/HF	Code Ref.
SSP	1⅜	6 11/16	(4) 0.148 x 1½	(3) 0.148 x 1½	—	330	—	—	IBC, FL, LA
				—	(1) 0.148 x 1½	—	395	310	
			(4) 0.148 x 3	(3) 0.148 x 3	—	410	—	—	
				—	(1) 0.148 x 3	—	430	400	
DSP	2¾	6 11/16	(8) 0.148 x 1½	(6) 0.148 x 1½	—	730	—	—	
				—	(2) 0.148 x 1½	—	620	515	
			(8) 0.148 x 3	(6) 0.148 x 3	—	780	—	—	
				—	(2) 0.148 x 3	—	780	565	
TSP	1½	7⅞	(6) 0.148 x 1½	—	(3) 0.148 x 1½	—	465[5]	400	FL
			(9) 0.148 x 1½	(6) 0.148 x 1½	—	755[4]	—	—	
				(6) 0.148 x 3		1,015[4]			

1. See pp. 260–261 for Straps and Ties General Notes.
2. When cross-grain bending or cross-grain tension cannot be avoided in the members, mechanical reinforcement to resist such forces shall be considered by the Designer.
3. Allowable loads for DSP installed to a rim board are 620 lb. (DF/SP) and 515 lb. (SPF/HF).
4. Noted values apply only to DF/SP members. For SPF values, multiply by 0.86.

` TSP STUD PLATE TIES

Table 3.22A1 **Laterally Unsupported (Dropped) Header Spans for Exterior Loadbearing Walls**

(Supporting a Roof and Ceiling)

Dead Load Assumptions: Roof/Ceiling Assembly = 20 psf, L/Δ_{LL}=240

Dropped Exterior

		Roof Live Load			Ground Snow Load								
		20 psf			30 psf			50 psf			70 psf		
		Building Width (ft)											
		12	24	36	12	24	36	12	24	36	12	24	36
Headers Supporting	**Size**	**Maximum Header/Girder Spans (ft-in.) for Common Lumber Species[1,3,4]**											
Roof and Ceiling	**1-2x6**	4 - 4	3 - 4	2 - 9	3 - 11	3 - 0	2 - 7	3 - 4	2 - 7	2 - 2	3 - 0	2 - 4	2 - 0
	1-2x8	5 - 3	4 - 1	3 - 6	4 - 10	3 - 9	3 - 3	4 - 2	3 - 3	2 - 9	3 - 9	2 - 11	2 - 6
	1-2x10	6 - 0	4 - 9	4 - 0	5 - 7	4 - 5	3 - 9	4 - 10	3 - 10	3 - 3	4 - 4	3 - 5	2 - 11
	1-2x12	6 - 6	5 - 3	4 - 7	6 - 2	5 - 0	4 - 4	5 - 5	4 - 5	3 - 9	4 - 11	4 - 0	3 - 4
	2-2x4	4 - 4	3 - 3	2 - 9	3 - 11	3 - 0	2 - 7	3 - 4	2 - 7	2 - 2	3 - 0	2 - 4	1 - 11
	2-2x6	6 - 2	4 - 10	4 - 1	5 - 8	4 - 5	3 - 9	4 - 11	3 - 10	3 - 3	4 - 5	3 - 5	2 - 11
	2-2x8	7 - 2	5 - 9	4 - 11	6 - 9	5 - 5	4 - 8	5 - 11	4 - 8	4 - 0	5 - 4	4 - 3	3 - 7
	2-2x10	7 - 10	6 - 4	5 - 6	7 - 6	6 - 1	5 - 3	6 - 7	5 - 4	4 - 8	6 - 0	4 - 10	4 - 2
	2-2x12	8 - 5	6 - 10	6 - 0	8 - 1	6 - 7	5 - 10	7 - 2	5 - 11	5 - 2	6 - 6	5 - 5	4 - 9
	3-2x8	8 - 5	6 - 10	5 - 11	8 - 0	6 - 6	5 - 7	7 - 1	5 - 8	4 - 11	6 - 5	5 - 2	4 - 5
	3-2x10	9 - 2	7 - 5	6 - 6	8 - 9	7 - 2	6 - 3	7 - 9	6 - 4	5 - 6	7 - 1	5 - 9	5 - 0
	3-2x12	9 - 9	8 - 0	7 - 0	9 - 4	7 - 8	6 - 9	8 - 4	6 - 10	6 - 1	7 - 8	6 - 3	5 - 7
	4-2x8	9 - 4	7 - 7	6 - 8	8 - 11	7 - 3	6 - 4	7 - 11	6 - 5	5 - 7	7 - 2	5 - 10	5 - 0
	4-2x10	10 - 2	8 - 3	7 - 3	9 - 8	8 - 0	7 - 0	8 - 8	7 - 1	6 - 3	7 - 11	6 - 6	5 - 8
	4-2x12	10 - 10	8 - 10	7 - 9	10 - 4	8 - 7	7 - 6	9 - 3	7 - 8	6 - 9	8 - 6	7 - 0	6 - 2

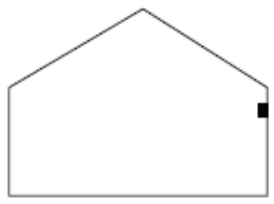

MAXIMUM HEADER SPANS

JOB TITLE	PR Homes: One Story Wood House		
JOB NO.		**SHEET NO.**	
CALCULATED BY	SW	**DATE**	2/6/20
CHECKED BY	MH	**DATE**	2/6/20

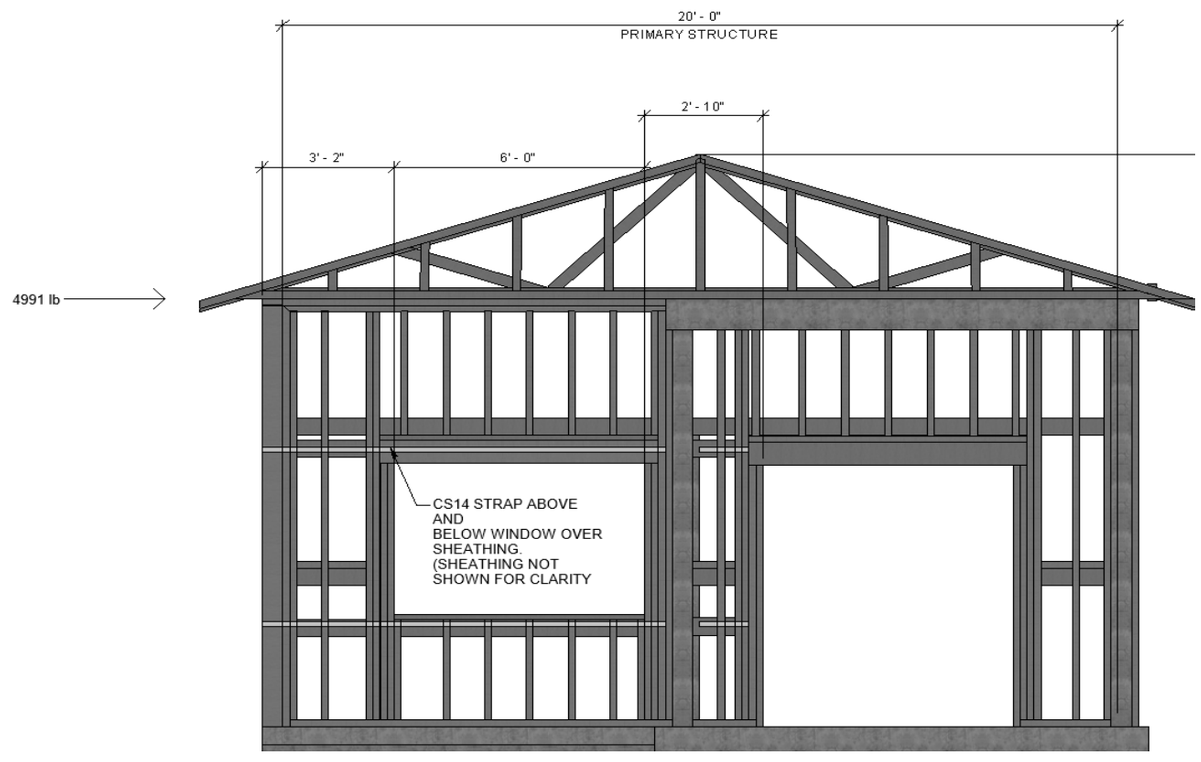

SEE APA FTAO CALCULUATOR EXCELL SPREADSHEET
DESIGN WITH ONE OPENING EXCLUDE PANEL ADJACENT TO DOOR

Shear Wall Design 20' Wall with door

Shear Wall Shear =	4991	lb	
Panel Shear (ASD) =	835	plf	
nominal shear =	1670	plf	
10d nails at 3" with 3" blocking 15/32" struct 1 OSB =	1860	plf	OK
required holddown force =	4758	lb	
USE HDU5 holddown capacity =	5645	lb	
USE SSTB 16 anchor bolt capacity =	5140	lb	
Deflection =	1.073	in	
height =	11.42	ft	
L/120 (Gyp Board flex finish) PER IBC=	1.142	in	OK
Strap force =	2024	lb	
Need 6+3+3 = 12' of strap			
CS14 strap comes in 40' length cut to size Capacity =	2490	lb	
Only need 2" x 6" blocking to facilitate 1/2" nail row stagger			
Required Shear Wall Anchorage Force =	417	lb/ft	
Uplift =	-82.89576	psf	
Uplift/ft (ASD) =	-547.112	lbs	
MASA Anchor Uplift Capacity =	750	lbs Cracked Conc	
MASA Anchor Shear Capacity =	1475	lbs Cracked Conc	
Provide MASA Anchor at 1' on center spacing			
No anchors required under window sill			
SEE 24' SHEAR WALL FOR ANCHOR BOLT DESIGN			
Hilti post installed 3/8" x 6 3/8" hilti hit z rod (3.3/8" embed) tension=	3755	lb	
Hilti post installed 3/8" x 6 3/8" hilti hit z rod (3 3/8" embed) shear =	2630	lb	
Hilti post installed uplift load (LRFD) =	-911.8534	lb	
Hilti post installed shear load =	695	lb	
Hilti spacing =	-4.117987	ft	Say 3ft

Note: Using screws however panel capacity will be the same
Also panel is thicker than values provided in NDS table
and will have greater capacity

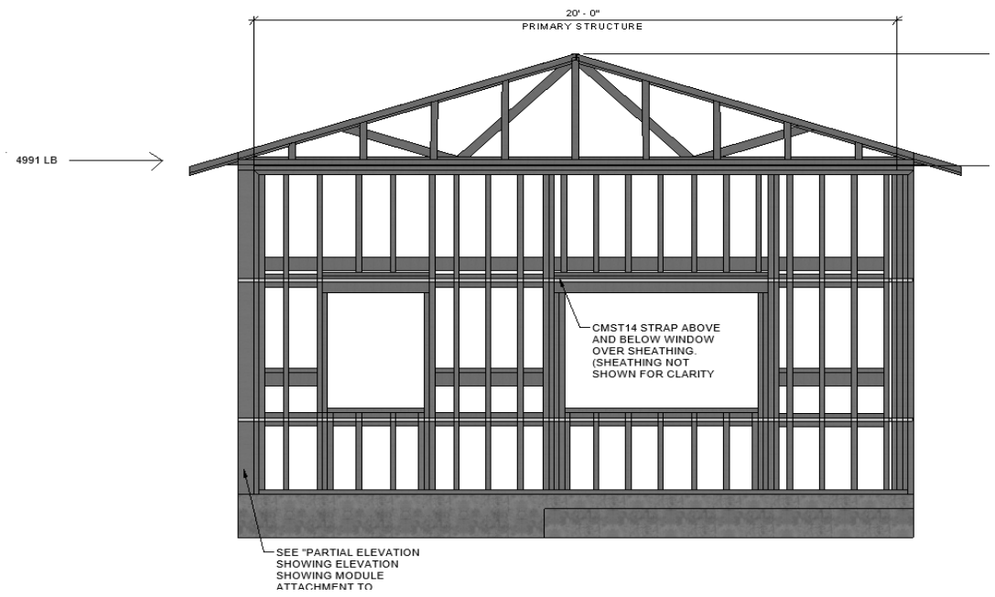

20' ShearWallWithTwoWindows

Shear Wall Design 20' Wall with door

Panel Shear (ASD) =	494	plf		
nominal shear =	988	plf		
10d nails at 3" with 3" blocking 15/32" struct 1 OSB =	1860	plf	OK	Note: Using screws however panel capacity will be the same
required holddown force =	2721	lb		
USE HDU5 holddown capacity =	5645	lb		
USE SSTB16 anchor bolt capacity =	5140	lb		
Deflection =	0.309	in		
height =	11.42	ft		
L/120 (Gyp Board flex finish) PER IBC=	1.142	in	OK	
Strap force =	1153	lb		
Need 6+3+3 = 12' of strap				
CMST14 strap comes in 40' length cut to size Capacity =	6475	lb	OK	
Required Shear Wall Force =	238	lb/ft	Doesn't control see above shear wall	
SEE 24' SHEAR WALL FOR ANCHOR BOLT DESIGN			for stud plate anchor design	

Copyright © American Wood Council. Downloa

Table 4.3A Nominal Unit Shear Capacities for Wood-Frame Shear Walls[1,3,6,7]

Wood-based Panels[4]

Sheathing Material	Minimum Nominal Panel Thickness (in.)	Minimun Fastener Penetration in Framing Member or Blocking (in.)	Fastener Type & Size	A SEISMIC												B WIND			
				Panel Edge Fastener Spacing (in.)												Panel Edge Fastener Spacing (in.)			
				6			4			3			2			6	4	3	2
				v_s (plf)	G_a (kips/in.)		v_s (plf)	G_a (kips/in.)		v_s (plf)	G_a (kips/in.)		v_s (plf)	G_a (kips/in.)		v_w (plf)	v_w (plf)	v_w (plf)	v_w (plf)
			Nail (common or galvanized box)		OSB	PLY		OSB	PLY		OSB	PLY		OSB	PLY				
Wood Structural Panels - Structural I[4,5]	5/16	1-1/4	6d	400	13	10	600	18	13	780	23	16	1020	35	22	560	840	1090	1430
	3/8[2]	1-3/8	8d	460	19	14	720	24	17	920	30	20	1220	43	24	645	1010	1290	1710
	7/16[2]			510	16	13	790	21	16	1010	27	19	1340	40	24	715	1105	1415	1875
	15/32			560	14	11	860	18	14	1100	24	17	1460	37	23	785	1205	1540	2045
	15/32	1-1/2	10d	680	22	16	1020	29	20	1330	36	22	1740	51	28	950	1430	1860	2435
	5/16	[illegible]	[illegible]	360	13	9.5	540	18	12	700	24	14	900	37	18	505	755	980	1260

NOMINAL SHEAR WALL CAPACITIES

Model No.	Ga.	Dimensions (in.)					Fasteners (in.)		Minimum Wood Member Size (in.)	Allowable Tension Loads (160)		
		W	H	B	CL	SO	Anchor Bolt Dia. (in.)	Wood Fasteners		DF/SP	SPF/HF	Deflection at Allowable Load (in.)
DTT1Z	14	1½	7⅛	1 7/16	¾	3/16	⅜	(6) SD #9 x 1½	1½ x 5½	840	840	0.17
								(6) 0.148 x 1½		910	640	0.167
								(8) 0.148 x 1½		910	850	0.167
SS DTT2Z	14	3¼	6 15/16	1⅝	13/16	3/16	½	(8) ¼ x 1½ SDS	1½ x 3½	1,825	1,800	0.105
								(8) ¼ x 1½ SDS	3 x 3½	2,145	1,835	0.128
SS DTT2Z-SDS2.5								(8) ¼ x 2½ SDS	3 x 3½	2,145	2,105	0.128
HDU2-SDS2.5	14	3	8 11/16	3¼	1 5/16	1⅜	⅝	(6) ¼ x 2½ SDS	3 x 3½	3,075	2,215	0.088
HDU4-SDS2.5	14	3	10 15/16	3¼	1 5/16	1⅜	⅝	(10) ¼ x 2½ SDS	3 x 3½	4,565	3,285	0.114
HDU5-SDS2.5	14	3	13 3/16	3¼	1 5/16	1⅜	⅝	(14) ¼ x 2½ SDS	3 x 3½	5,645	4,340	0.115
									3 x 3½	6,765	5,820	0.11

HDU5 HOLDDOWN ALLOWABLE CAPACITIES

Simpson Strong-Tie® Wood Construction Connectors

SIMPSON Strong-Tie

MASA/MASAP

Mudsill Anchors (cont.)

These products are available with additional corrosion protection. For more information, see p. 15.

Model No.	Sill Size	Fasteners (in.)		Allowable Loads												Code Ref.
				Uncracked						Cracked						
				Wind and SDC A&B[5,6]			SDC C–F[6]			Wind and SDC A&B[5,6]			SDC C–F[6]			
		Sides	Top	Uplift	F_1	F_2	Uplift	F_1	F_2	Uplift	F_1	F_2	Uplift	F_1	F_2	
Standard Installation – Attached to DF/SP Sill Plate																
MASA or MASAP	2x4, x6, x8, x10	(3) 0.148 x 1½	(6) 0.148 x 1½	920	1,475	1,095	745	1,235	1,045	750	1,475	875	660	1,235	765	IBC, FL, LA
	3x4, 3x6	(5) 0.148 x 1½	(4) 0.148 x 1½	630	1,165	725	550	1,020	725	475	1,165	725	415	1,020	640	
One-Leg-Up Installation – Attached to DF/SP Sill Plate																

MASA MUDSILL ANCHOR CAPACITIES

SD Many of these products are approved for installation with Strong-Drive® SD Connector screws. See pp. 335–337 for more information.

Model No.	Total L	Ga.	DF/SP Fasteners (in.)	DF/SP End Length	SPF/HF Fasteners (in.)	SPF/HF End Length	Allowable Tension Loads (160)	Code Ref.
CMST12	40'	12	(74) 0.162 x 2½	33"	(84) 0.162 x 2½	38"	9,215	IBC, FL, LA
			(86) 0.148 x 2½	39"	(98) 0.148 x 2½	44"	9,215	
CMST14	52½'	14	(56) 0.162 x 2½	26"	(66) 0.162 x 2½	30"	6,475	
			(66) 0.148 x 2½	30"	(76) 0.148 x 2½	34"	6,475	
CMSTC16	54'	16	(50) 0.148 x 3¼	20"	(58) 0.148 x 3¼	25"	4,690	
CS14	100'	14	(26) 0.148 x 2½	15"	(30) 0.148 x 2½	16"	2,490	
			(30) 0.131 x 2½	16"	(36) 0.131 x 2½	19"	2,490	
SS CS16	150'	16	(20) 0.148 x 2½	11"	(22) 0.148 x 2½	13"	1,705	
			(22) 0.131 x 2½	13"	(26) 0.131 x 2½	15"	1,705	
CS20	250'	20	(12) 0.148 x 2½	7"	(14) 0.148 x 2½	9"	1,030	
			(14) 0.131 x 2½	9"	(16) 0.131 x 2½	9"	1,030	

1. See pp. 260–261 for Straps and Ties General Notes.
2. Calculate the connector value for a reduced number of nails as follows:

CS16 STRAP TENSION ALLOWABLE CAPACITIES

(216)	(82.3)	(82.3)	(82.3)	(82.3)	(185.2)	(202.9)	(234.2)	(286.9)

Table 4 - Hilti HIT-HY 200 design strength with concrete/pullout failure for Hilti HIT-Z(-R) rods in cracked concrete[1,2,3,4,5,6,7,8,9,10]

Nominal anchor diameter in.	Effective embed. in. (mm)	Tension — ΦN_n f'_c = 2,500 psi (17.2 MPa) lb (kN)	Tension f'_c = 3,000 psi (20.7 MPa) lb (kN)	Tension f'_c = 4,000 psi (27.6 MPa) lb (kN)	Tension f'_c = 6,000 psi (41.4 MPa) lb (kN)	Shear — ΦV_n f'_c = 2,500 psi (17.2 MPa) lb (kN)	Shear f'_c = 3,000 psi (20.7 MPa) lb (kN)	Shear f'_c = 4,000 psi (27.6 MPa) lb (kN)	Shear f'_c = 6,000 psi (41.4 MPa) lb (kN)
3/8	2-3/8 (60)	2,020 (9.0)	2,215 (9.9)	2,560 (11.4)	3,135 (13.9)	2,180 (9.7)	2,385 (10.6)	2,755 (12.3)	3,375 (15.0)
	3-3/8 (86)	3,425 (15.2)	3,755 (16.7)	4,335 (19.3)	5,170 (23.0)	7,380 (32.8)	8,085 (36.0)	9,335 (41.5)	11,430 (50.8)
	4-1/2 (114)	5,170 (23.0)	5,170 (23.0)	5,170 (23.0)	5,170 (23.0)	11,360 (50.5)	12,445 (55.4)	14,370 (63.9)	17,600 (78.3)
	2-3/4	2,520	2,760	3,185	3,905	5,425	5,945	6,865	8,405

HILTI POST INSTALLED ANCHOR BOLT LRFD CAPACITIES

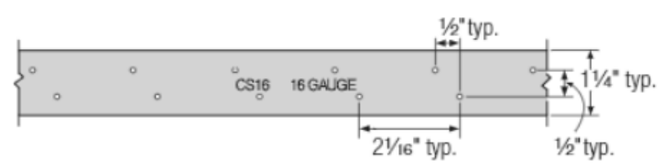

CS16 Hole Pattern
(all other CS straps similar)

Table 5 - Steel design strength for Hilti HIT-Z and HIT-Z-R rods [1,2]

Nominal anchor diameter in.	ACI 318-14 Chapter 17 Based Design — HIT-Z carbon steel rod: Tensile[3] ϕN_{sa} lb (kN)	HIT-Z carbon steel rod: Shear[4] ϕV_{sa} lb (kN)	HIT-Z carbon steel rod: Seismic Shear[5] $\phi V_{sa,eq}$ lb (kN)	HIT-Z-R stainless steel rod: Tensile[3] ϕN_{sa} lb (kN)	HIT-Z-R stainless steel rod: Shear[4] ϕV_{sa} lb (kN)	HIT-Z-R stainless steel rod: Seismic Shear[5] $\phi V_{sa,eq}$ lb (kN)
3/8	4,750 (21.1)	1,930 (8.6)	1,930 (8.6)	4,750 (21.1)	2,630 (11.7)	2,630 (11.7)
1/2	8,695 (38.7)	3,530 (15.7)	2,295 (10.2)	8,695 (38.7)	4,815 (21.4)	3,610 (16.1)
5/8	13,850 (61.6)	5,625 (25.0)	3,655 (16.3)	13,850 (61.6)	7,670 (34.1)	4,985 (22.2)
3/4	20,455 (91.0)	8,310 (37.0)	5,400 (24.0)	20,455 (91.0)	11,330 (50.4)	7,365 (32.8)

1 See section 3.1.8 to convert design strength value to ASD value.
2 HIT-Z and HIT-Z-R rods are to be considered brittle steel elements.
3 Tensile = $\phi A_{se,N} f_{uta}$ as noted in ACI 318-14 Chapter 17.
4 Shear values determined by static shear tests with $\phi V_{sa} \leq \phi\, 0.60\, A_{se,V} f_{uta}$ as noted in ACI 318-14 Chapter 17.
5 Seismic Shear = $\alpha_{V,seis}\, \phi_{Vsa}$: Reduction for seismic shear only. See section 3.1.8 for additional information on seismic applications.

HILTI POST INSTALLED ANCHOR BOLT LRFD CAPACITIES

JOB TITLE	PR Homes: One Story Wood House		
JOB NO.		**SHEET NO.**	
CALCULATED BY	SW	**DATE**	2/6/20
CHECKED BY	MH	**DATE**	2/6/20

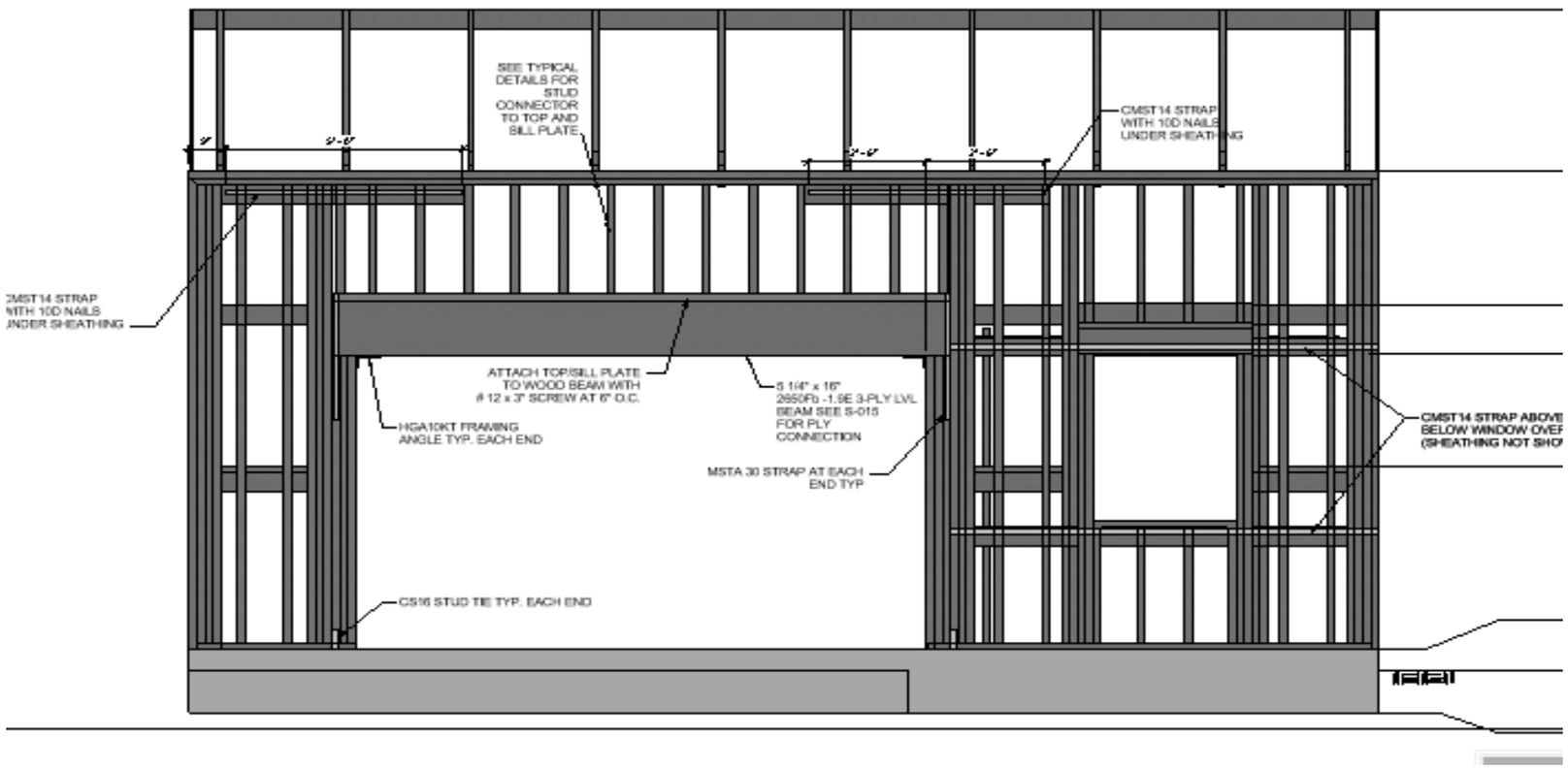

THIS DESIGN WILL WORK FOR MODULE WALL WITH 12' OPNG WITH SHORTER PANELS AND LESS LOAD

Shear Wall Design 24' Wall with large opening and window			
Shear Wall total shear =	3988 lb		
Panel Shear (ASD) =	625 plf		
nominal shear =	1250 plf		
10d nails at 3" with 3" blocking 15/32" struct 1 OSB =	1860 plf	OK	Note: Using screws however panel capacity will be the same
required holddown force =	4638 lb		Also panel is thicker than values provided in NDS table
USE HDu5 holdown capacity =	5645 lb		and will have greater capacity
NEED 2 STUDS AT EACH HOLDDOWN			
Deflection =	0.58 in		
height =	11.42 ft		
L/120 (Gyp Board flex finish) PER IBC=	1.142 in	OK	
Strap force =	1050 lb		
Need 6+3+3 = 12' of strap			
CMST14 strap comes in 40' length cut to size Capacity =	6475 lb		
required 2 1/2" nails need blocking behind			
Required Shear Wall Sill Plate Anchorage Force =	406 lb/ft		
SEE 20' Shear Wall for Sill Plate Anchor Design			
Use SSTB 16Anchor Bolt With 13" Embedment Tensile Cap =	5140 lbs	OK >	4638
Collector Force Required Right Side =	3988 lbs		
CMST14 Strap Capacity =	6475 lbs		
Collector Force Left Side < Right Side use same strap (conservative)			
CMST14 Required Development Length =	30 Use with 10D nails		
	need blocking behind collector		

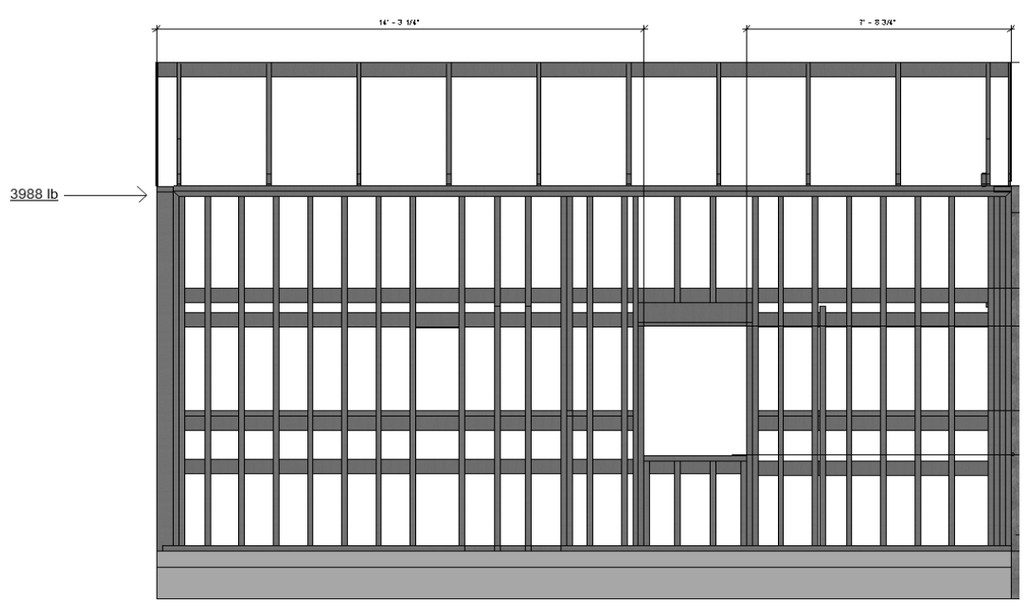

BY INSPECTION ABOVE DESIGN WILL WORK FOR THIS WALL

Anchor Bolt (cont.)

These products are available with additional corrosion protection. For more information, see p. 15.

SSTB Bolts at Slab on Grade: Edge

Model No.	Dimensions (in.)				Allowable Tension Loads				Code Ref.
	Footing Width	Dia.	Length	Min. Embed. (l_e)	Wind and SDC A&B		SDC C–F		
					Midwall	Corner	Midwall	Corner	
SSTB16	12	⅝	17⅝	12⅝	5,140	5,140	3,780	3,780	IBC, FL, LA
SSTB20	12	⅝	21⅝	16⅝	6,285	6,285	4,785	4,785	
SSTB24	12	⅝	25⅝	20⅝	6,675	6,675	5,790	5,790	
SSTB28	12	⅝	29⅝	24⅝	12,640	13,080	11,060	11,645	
SSTB34	12	⅝	34⅝	28⅝	12,640	13,080	11,060	11,645	
SSTB36	12	⅝	36⅝	28⅝	12,640	13,080	11,060	11,645	

1. Rebar is required at the top of stem wall foundations, but is not required for slab-on-grade edge and garage curb, or stem wall garage front installations.
2. Minimum end distances for SSTB bolts are as shown in graphics.
3. To obtain LRFD values, multiply ASD seismic load values by 1.4 and wind load values by 1.67 (1.6 for 2012 IBC).
4. Per Section 1613 of the IBC, detached one- and two-story dwellings in SDC C may use "Wind and SDC A&B" allowable loads.
5. Midwall loads apply when anchor is 1.5 l_e or greater from the end. For bolts acting in tension simultaneously, the minimum bolt center-to-center spacing is 3 l_e.

SSTB 16 ALLOWABLE CAPACITIES

JOB TITLE	PR Homes: One Story Wood House		
JOB NO.		**SHEET NO.**	
CALCULATED BY	SW	**DATE**	2/6/20
CHECKED BY	MH	**DATE**	2/6/20

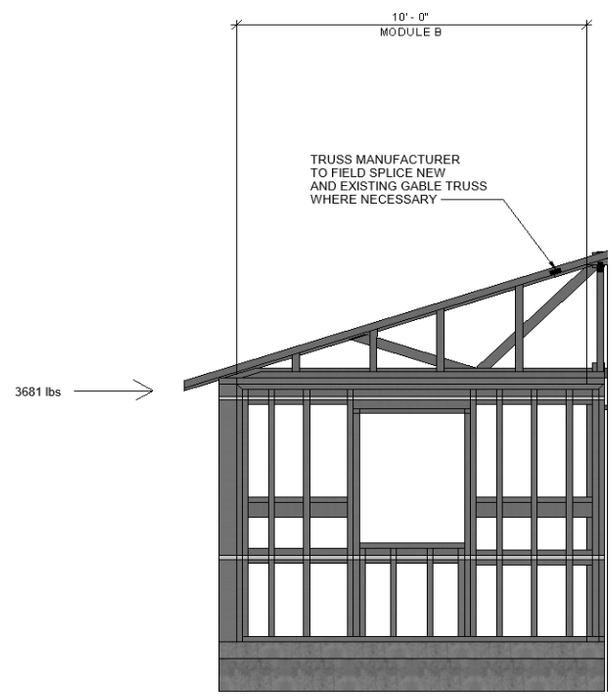

This 10' Wall has less height but bigger width and less load than 20' Shear wall segment with a 6' window. Therefore that design is acceptable.
See 20' shear wall tab.

V =	1793	lbs	
V(ft) =	199.2001	lbs	OK < 1860 lbs 15/32" sheathing with nails at 3"
M =	14342.4	ft lbs	
T =	1593.6	lbs	OK< 5140 SSTB16 anchor bolt

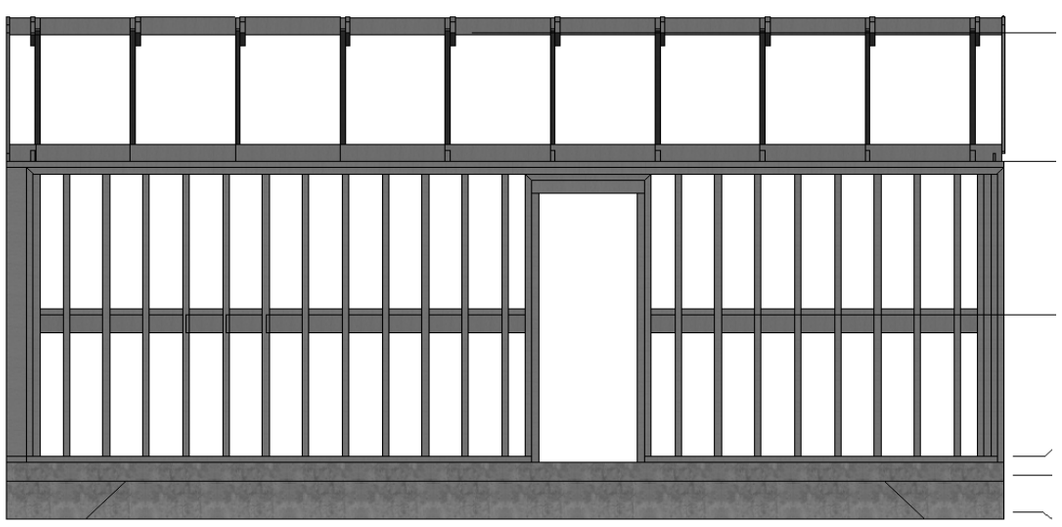

This 24' module wall has a door and will be designed using the preferated shear wall method

V (asd) =	1793			
V ft (asd) =	75	lb/ft		
Ao =	21	sq ft		
Li 1 =	13.33	ft		
Li 2 =	9.17	ft		
Sum of Li =	22.5	ft		
Ltot =	25.5	ft		
% Full Ht. Sheathing =	0.882353			
Co =	0.806			
Adjusted unit shear capacity =	1499.16	lb/ft		
Required nominal capacity =	149.4	lb/ft	OK <	1499.16 lb/ft

Table 4.3.3.5 Shear Capacity Adjustment Factor, C_o

Wall Height, h	Maximum Opening Height [1]				
	h/3	h/2	2h/3	5h/6	h
8' Wall	2'-8"	4'-0"	5'-4"	6'-8"	8'-0"
10' Wall	3'-4"	5'-0"	6'-8"	8'-4"	10'-0"
Percent Full-Height Sheathing [2]	**Effective Shear Capacity Ratio**				
10%	1.00	0.69	0.53	0.43	0.36
20%	1.00	0.71	0.56	0.45	0.38
30%	1.00	0.74	0.59	0.49	0.42
40%	1.00	0.77	0.63	0.53	0.45
50%	1.00	0.80	0.67	0.57	0.50
60%	1.00	0.83	0.71	0.63	0.56
70%	1.00	0.87	0.77	0.69	0.63
80%	1.00	0.91	0.83	0.77	0.71
90%	1.00	0.95	0.91	0.87	0.83
100%	1.00	1.00	1.00	1.00	1.00

PREFERATED SHEAR WALL ADJUSTMENT FACTORS

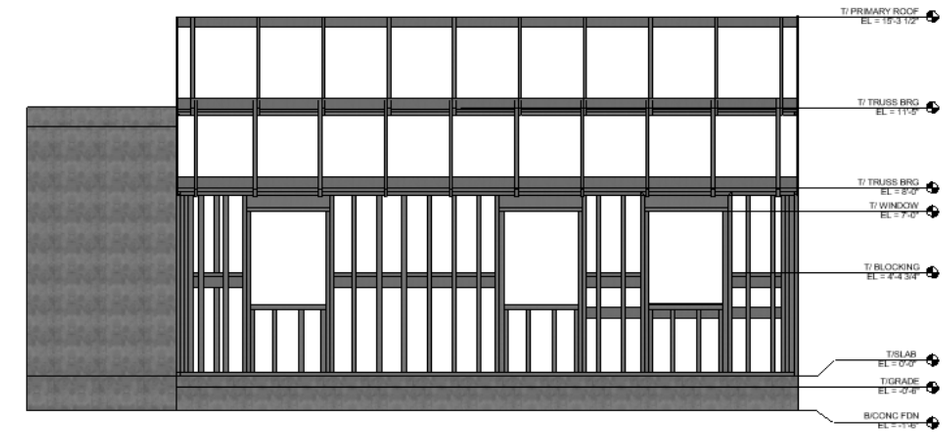

Out of these two 24' module walls the wall with the three windows will control. This wall will be designed using the preferated shear wall method.

V (asd) =	1793				
V ft (asd) =	74.70002	lb/ft			
Ao =	36	sq ft			
Li 1 =	3	ft			
Li 2 =	7.17	ft			
Li 3 =	2.82	ft			
Li 4 =	3	ft			
Sum of Li =	15.99	ft			
Ltot =	25.5	ft			
% Full Ht. Sheathing =	0.627059				
Opening Ht. =	4	ft			
Co =	0.83				
Adjusted unit shear capacity =	1499.16	lb/ft	SEE 24' Shear Wall Tab		
Required nominal capacity =	149.4	lb/ft	OK <	1499.16 lb/ft	
Required uplift =	720.0002	lb	OK <	5645 lb	HDU5
				5140 lb	SSTB 16 anchor bolt

Table 4.3.3.5 Shear Capacity Adjustment Factor, C_o

Wall Height, h	Maximum Opening Height [1]				
	h/3	h/2	2h/3	5h/6	h
8' Wall	2'-8"	4'-0"	5'-4"	6'-8"	8'-0"
10' Wall	3'-4"	5'-0"	6'-8"	8'-4"	10'-0"
Percent Full-Height Sheathing [2]	Effective Shear Capacity Ratio				
10%	1.00	0.69	0.53	0.43	0.36
20%	1.00	0.71	0.56	0.45	0.38
30%	1.00	0.74	0.59	0.49	0.42
40%	1.00	0.77	0.63	0.53	0.45
50%	1.00	0.80	0.67	0.57	0.50
60%	1.00	0.83	0.71	0.63	0.56
70%	1.00	0.87	0.77	0.69	0.63
80%	1.00	0.91	0.83	0.77	0.71
90%	1.00	0.95	0.91	0.87	0.83
100%	1.00	1.00	1.00	1.00	1.00

PREFERATED SHEAR WALL ADJUSTMENT FACTORS

JOB TITLE	PR Homes: One Story Wood House		
JOB NO.		**SHEET NO.**	
CALCULATED BY	SW	**DATE**	2/6/20
CHECKED BY	MH	**DATE**	2/6/20

Twelve Foot Opening Design Primary Structure

DL roof =	20	psf	
Lr =	20	psf	
Half of Roof Width =	12.65	ft	
DL wall =	20	psf	
Height Above Opening =	4	ft	
Header DL =	332.98	lb/ft	
Header LL =	252.98	lb/ft	
D+L =	585.96	lb/ft	
0.6W =	-52.59	psf	
0.6W lbs/ft =	-105.18	lb/ft	
b =	5.25		
d =	16.00		
Sx =	224.00	in^3	OK
Ix =	1792.00	in^4	
Sy =	73.50	in^3	OK
Iy =	192.94	in^4	
Allowable Stress 2650F-1.9E =	2650.00	psi	
Mapp D+L =	10547.36	lb ft	
Applied Stress D + L =	565.04	psi	
Allowable Stress 2650Fb-1.9E =	2650.00	psi	OK
Use L/360 defl criteria for britle windows =	0.4	in	
Applied Live Load Deflection =	0.034666172	in	OK
Moment 0.6W =	-1893.328872	lb ft	
Applied Stress 0.6W =	-309.1149179	psi	
Fby =	1600	psi	OK
Use L/360 defl criteria for britle windows =	0.4	in	OK
Applied Wind Load Deflection =	-0.133872325	in	
Fv wind =	-631.109624	lbs	OK
V downwards =	3515.786554	lbs	
V out of plane =	-631.109624	lbs	
HGA10kt out of plane =	1165	lbs	OK > 631.1096 lbs
3 (2 x 6) area =	24.75	sq in	
Fc =	1000	psi	
l1 =	48	in	
d1 =	5.5	in	
Kf =	1		
E'min =	400000	psi	
le/d =	8.727272727		
Fce =	4316.927083	psi	
Fc* =	1000	psi	
1 + Fce/Fc*/(2c) =	3.323079427		
Cp =	0.94680124		
F'c =	946.8012396	psi	
Allowable Compression =	23433.33068	lbs	OK > 3515.787 lbs

Three Foot Opening Out of Plane Check

V (D+L) =		878.9466		
V(0.6W) =		-157.7774		
A33 out of plane =		340	lbs	> -157.7774 lbs OK

Six Foot Opening Out of Plane Check

V (D+L) =		1757.893		
V(0.6W) =		-315.5548		
A33 out of plane =		340	lbs	> -315.5548 lbs OK

Use A33 for 3' and 6' openings
for gravity conn. check see "Wall Design Calcs per WFCM"
for uplift see "Wall Design Calcs"

LVL PLY Connector Design

Max Shear =	-631.109624	lbs	
Ply width =	1.75	in	
Ply height =	16	in	
Total width =	5.25	in	
Q =	24.5	in^3	
I =	192.9375	in^4	OK
VQ/I =	-961.6908556	lbs/ft	
TRY 2 SDW22500-R50 screws			
Z' =	275	lbs/ft	
Max Spacing for 2 screws =	6.862912298	in	
USE 2 SDW22500-R50 screws staggered at 6" on center			

Twelve Foot Opening Design Module

DL roof =	20	psf	
Lr =	20	psf	
Half of Roof Width =	6.00	ft	
DL wall =	20	psf	
Height Above Opening =	1	ft	
Header DL =	140.00	lb/ft	
Header LL =	120.00	lb	
D+L =	260.00	lb/ft	
0.6W =	0.00	psf	
0.6W lbs/ft =	0.00	lb/ft	
b =	5.25		
d =	7.25		
Sx =	45.99	in^3	OK
Ix =	166.72	in^4	
Sy =	33.30	in^3	OK
Iy =	87.42	in^4	
Allowable Stress 2650F-1.9E =	2650.00	psi	
Mapp D+L =	4680.00	lb ft	
Applied Stress D + L =	1221.08	psi	
Allowable Stress 2650Fb-1.9E =	2650.00	psi	OK
Use L/360 defl criteria for britle windows =	0.4	in	
Applied Live Load Deflection =	0.176743345	in	OK

STARR II

PR Prescriptive Homes Calculations

JOB TITLE	PR Homes: One Story Wood House		
JOB NO.		**SHEET NO.**	
CALCULATED BY	SW	**DATE**	2/6/20
CHECKED BY	MH	**DATE**	2/6/20

CONCRETE DESIGN

DL =	20	psf	
LL =	40	psf	
Wall Weight =	20	psf	
Assuming 1'-6" x 1'-6" turn down edge			
Conc Weight =	337.50	lb/ft	
Building Wall Trib /ft =	12.65	ft	
Wall Height =	11.42	ft	
Bearing Pressure/ft =	883.2666667	psf/ft	
Allowed Bearing Pressure =	1500.00	psf	OK
Uplift Check:			
Dead Load into Ram 24' wall =	428.40	lb/ft	
Dead Load into Ram 20' wall =	228.40	lb/ft	
Live Load into Ram 24' wall =	400.00	lb/ft	
Wind Uplift =	-82.89576333	psf	
Wind Uplift into Ram 24' wall =	-828.9576333	lb/ft	Uplift transferred through trusses
Wind Wall Pressure =	90.68	psf	Combined
Wind Overturning Moment =	5912.95	lb/ft/ft	
Wind Overturning into Ram 24' wall =	295.6476819	lb/ft	Compression or Uplift
Total Uplift Wind Only =	1124.605315	lb/ft	
Uplift on Compression Wall =	-533.3099514	lb/ft	

Safe Room Loads:

DL Roof =	75	psf
LL =	40	psf
Wall Wt. =	512	lb/ft
Wind Speed =	250	mph
Kd =	0.85	
Kzt =	1	
G =	0.85	
Kh =	1.03	
qz =	140.08	psf
G =	0.85	
Cp windward =	0.8	
Cp leeward =	-0.5	
Cp Side =	-0.7	
Cp roof =	-0.9	
Gcpi =	0.55	
Windward load =	18.2104	psf
Leeward load =	-136.578	psf
Upward Load =	-184.2052	psf
Sidewall Load =	-160.3916	psf

Porch Wind lods

DL Roof =	self		
LL =	40	psf	
Wind Speed =	190	mph	
Kd =	0.85		
Kzt =	1		
G =	0.85		
Kh =	1.03		
qz =	80.91021	psf	
G =	0.85		
Cn =	1.2		
Cf =	2		
Wall Wind Load =	137.5474	psf	
Roof Uplift =	82.52841	psf	
Wall Span =	11.5	ft	
Mu (wind) =	2.27383	k ft	
As req prelim =	0.284229	sq in	No. 6 at 18
As min =	0.144	sq in	
Vu =	0.790897	kip	
Phi Vc =	2.957702	kip	6" Wall d =3"
a =	0.575163	in	
d =	2.625	in	
Phi Mn =	3.085392	kip ft	OK

make roof steel similar to wall steel (roof has less loads and smaller span)

RAM Results:

Max Uplift =	NONE	in				
Max Slab Stress =	0.21	ksi				
Modulus of Rupture =	0.410791918	ksi	OK	SF =	2.0	OK don't need reinforcement for tensile stress
Max Bearing Pressure =	633	psf	OK	< 1500	psf	

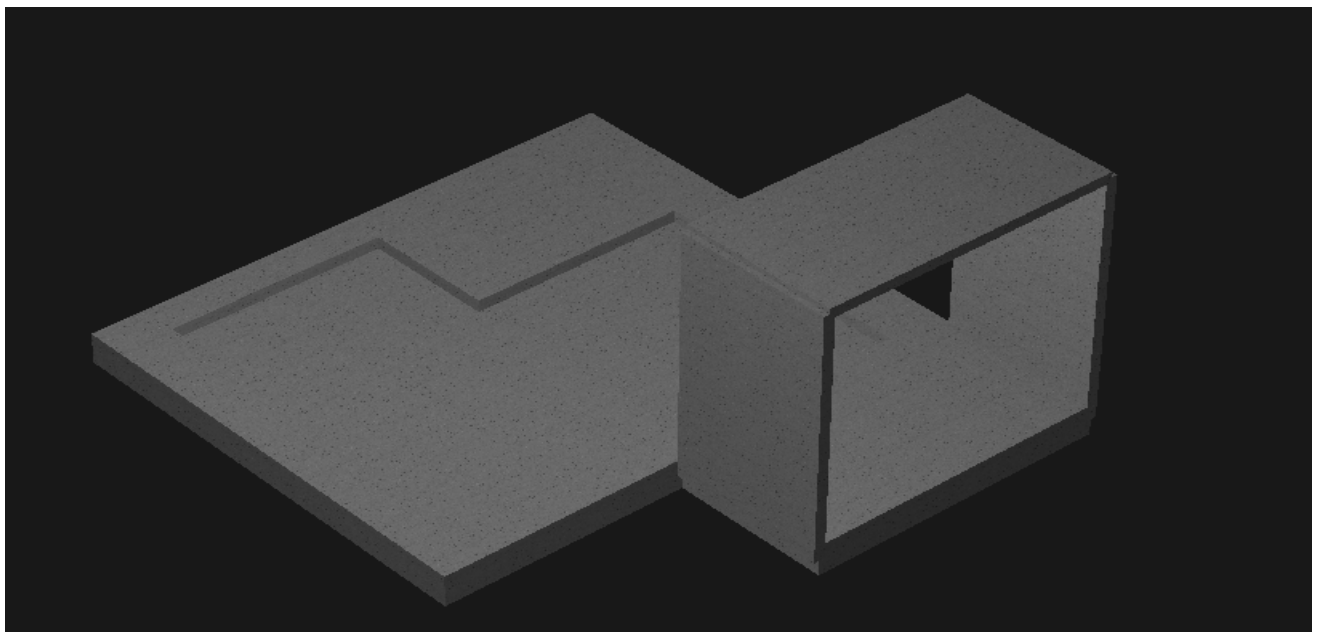

RAM MODEL RENDERING

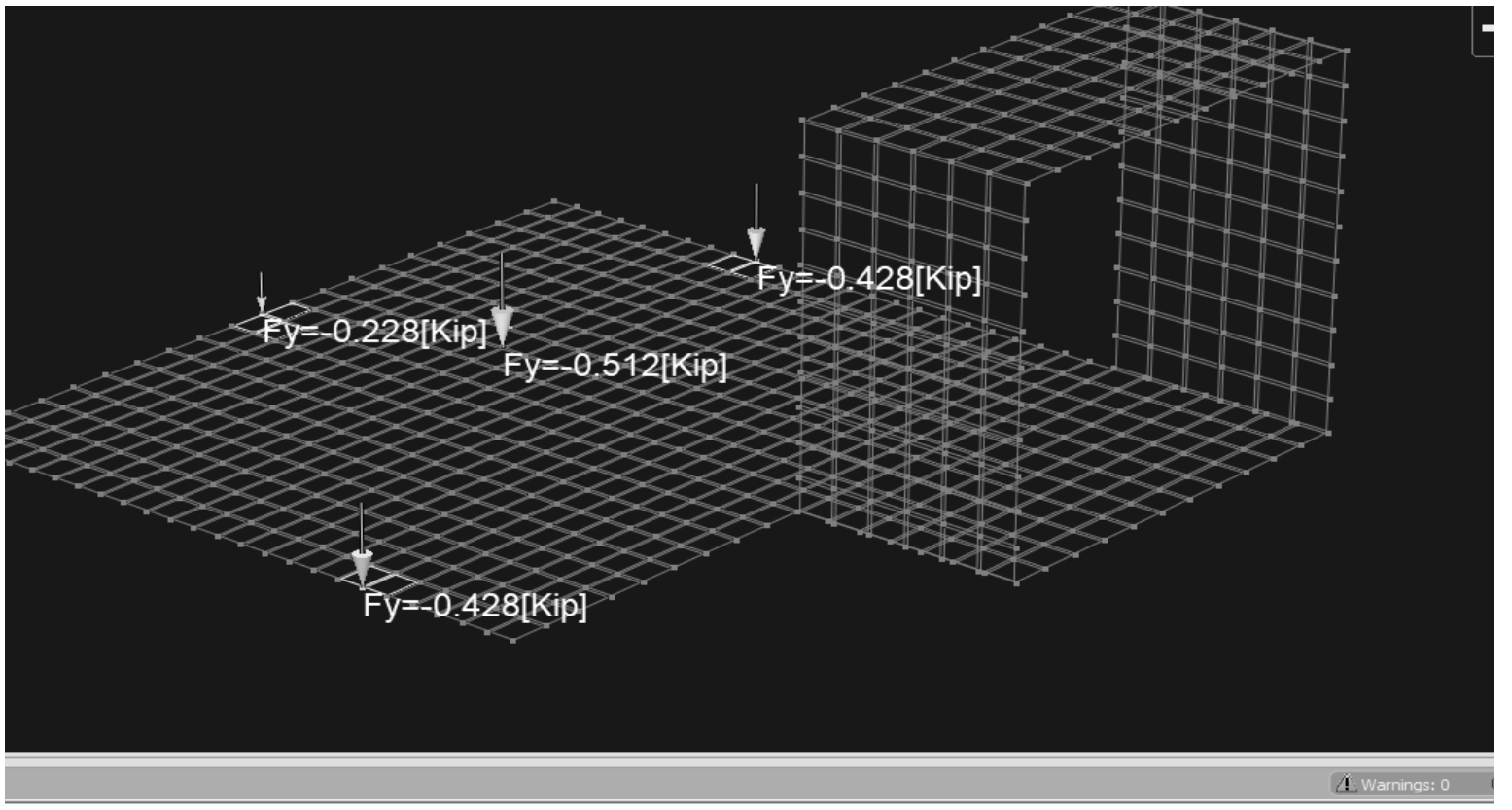

RAM MODEL APPLIED DEAD LOADS

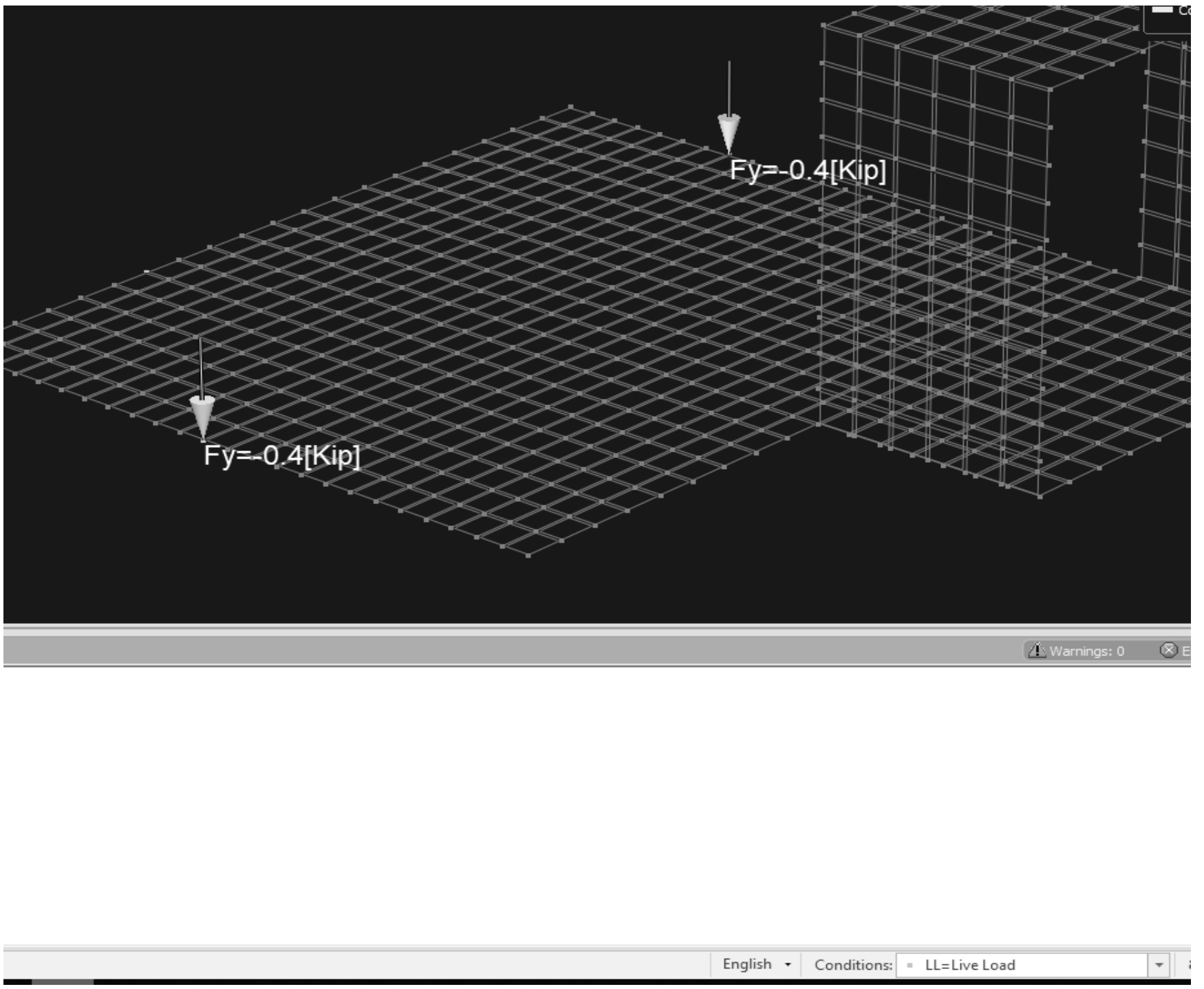

RAM MODEL APPLIED LIVE LOADS (note area Live load not applied to slab to produce maximum tension in slab)

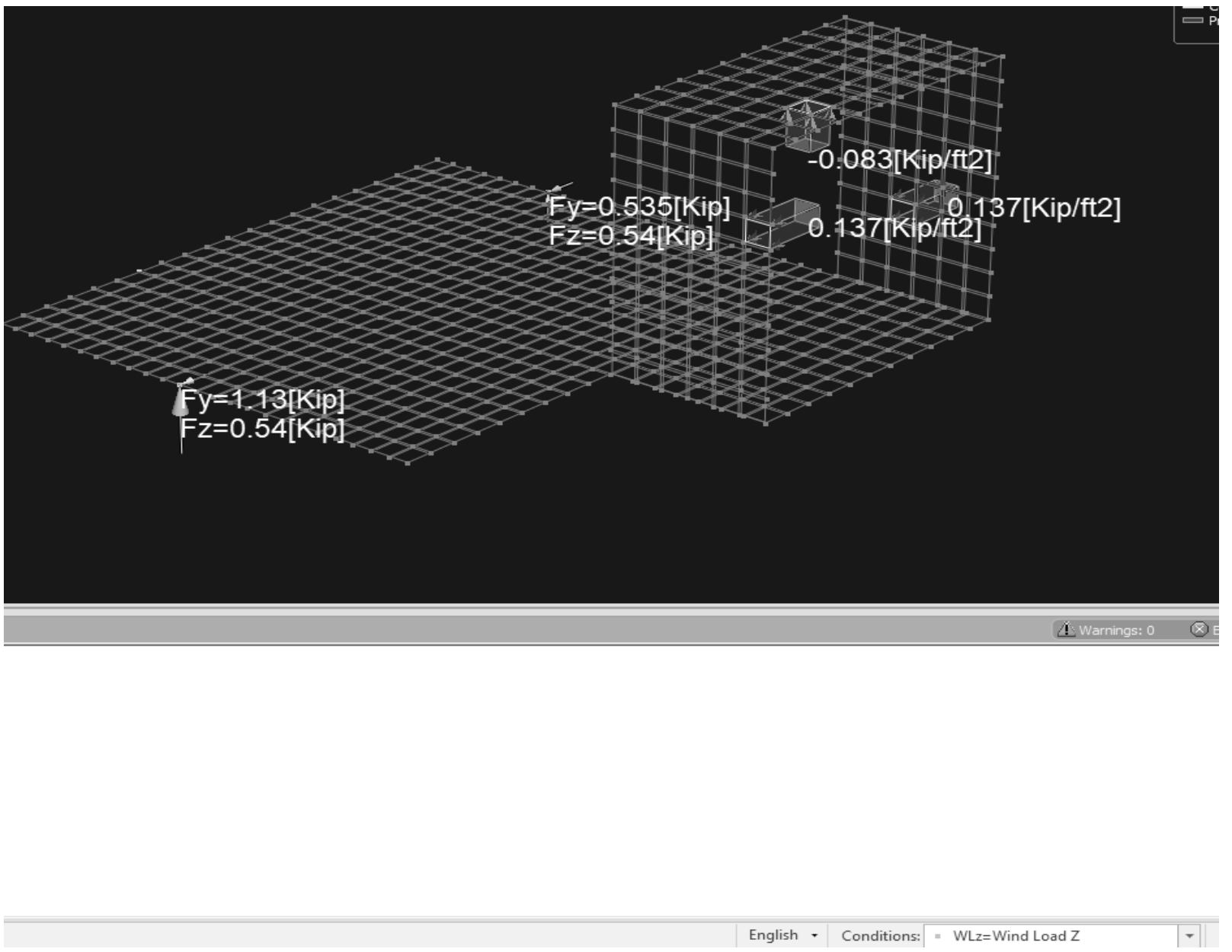

RAM MODEL APPLIED WIND LOADS

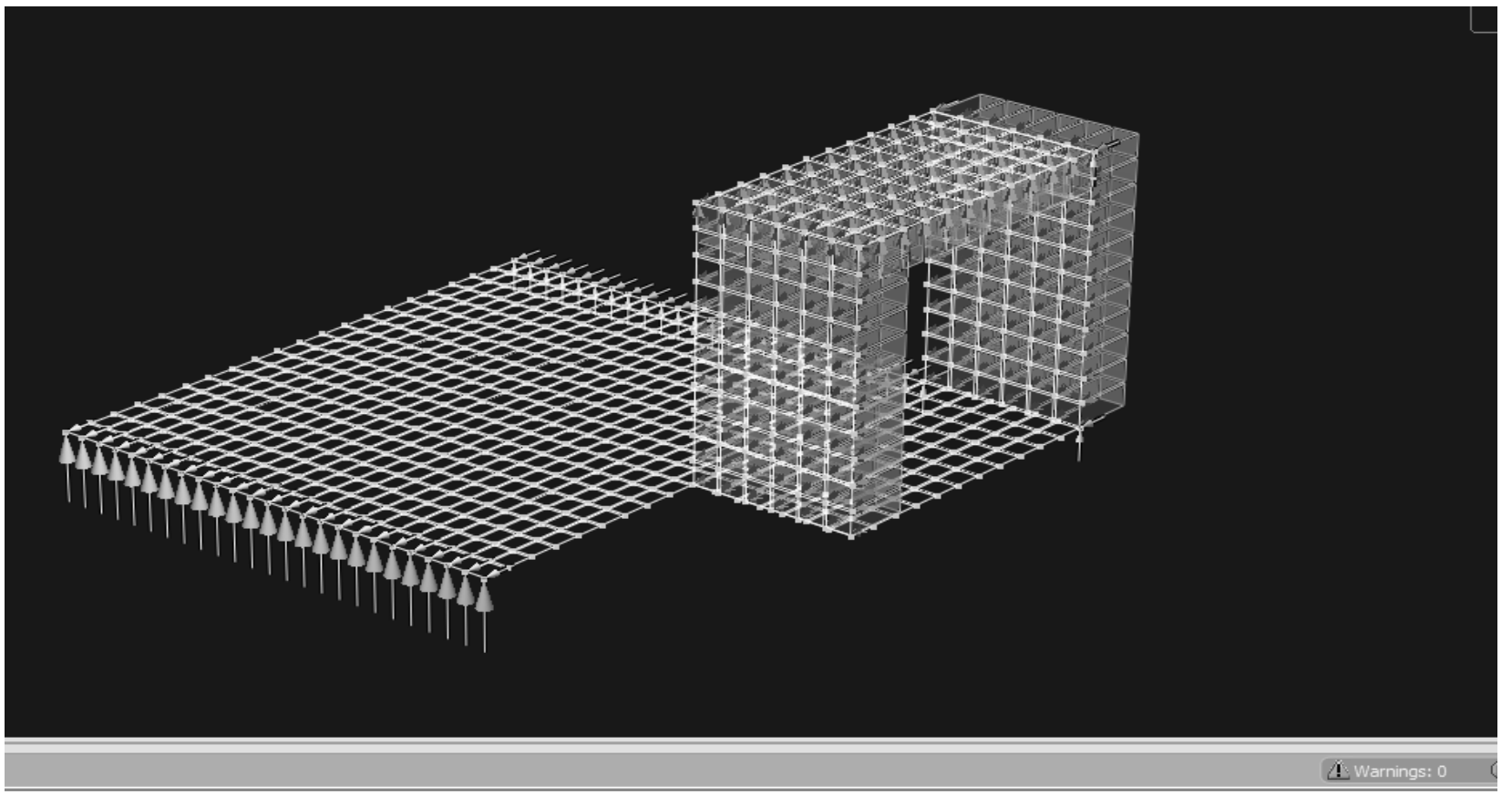

RAM MODEL APPLIED WIND LOADS

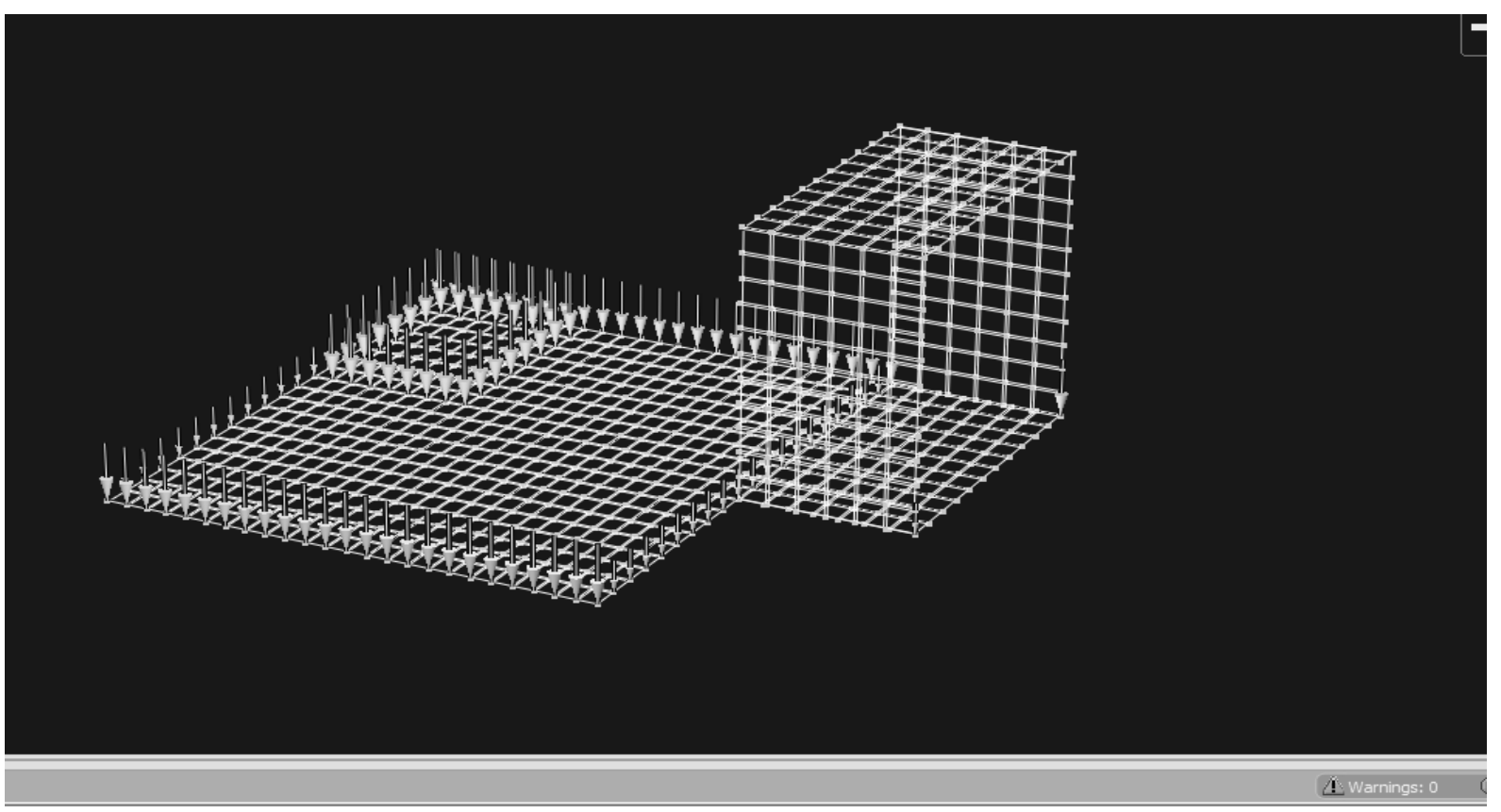

RAM MODEL APPLIED DEAD LOADS

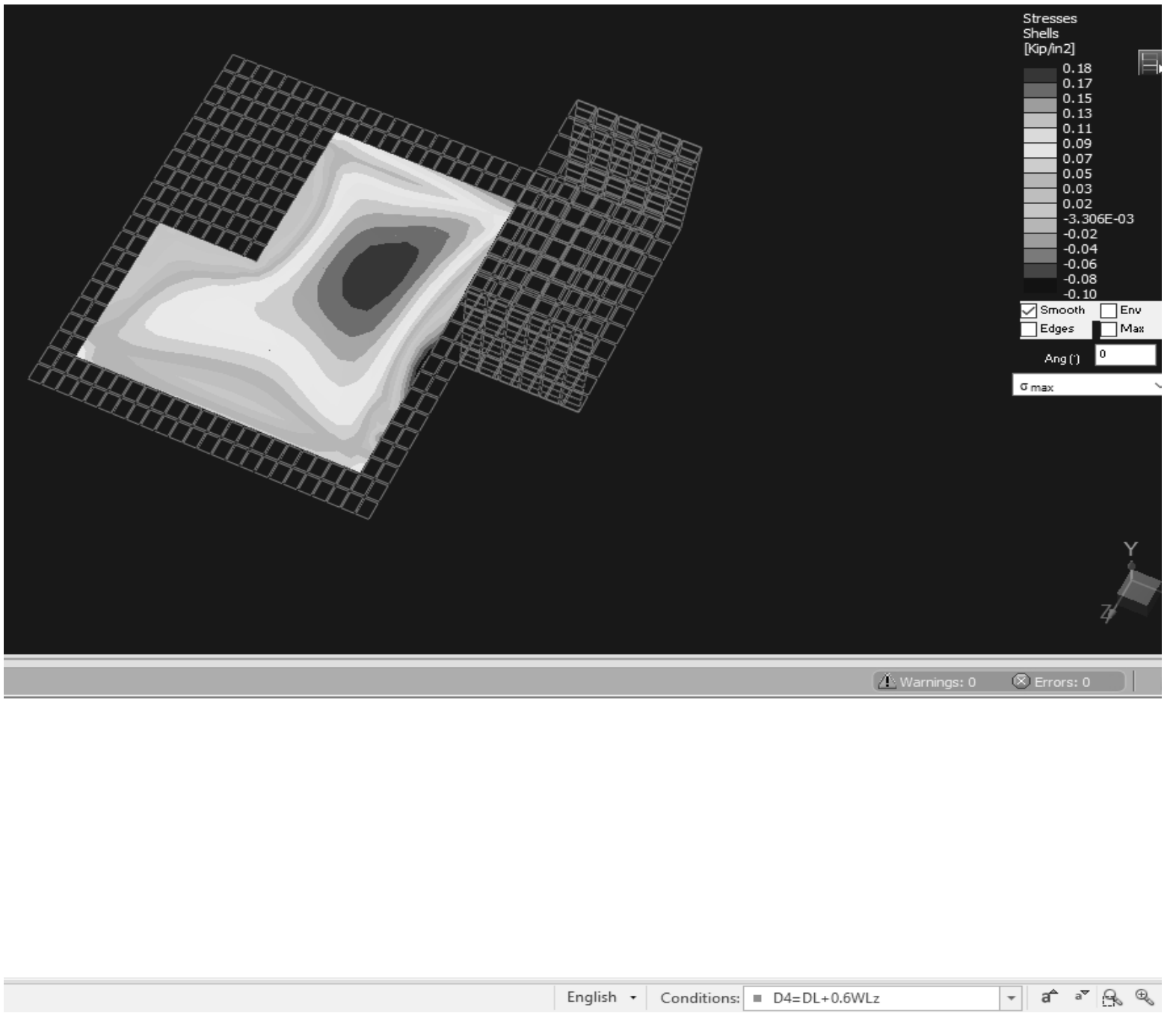

RAM MODEL APPLIED STRESS

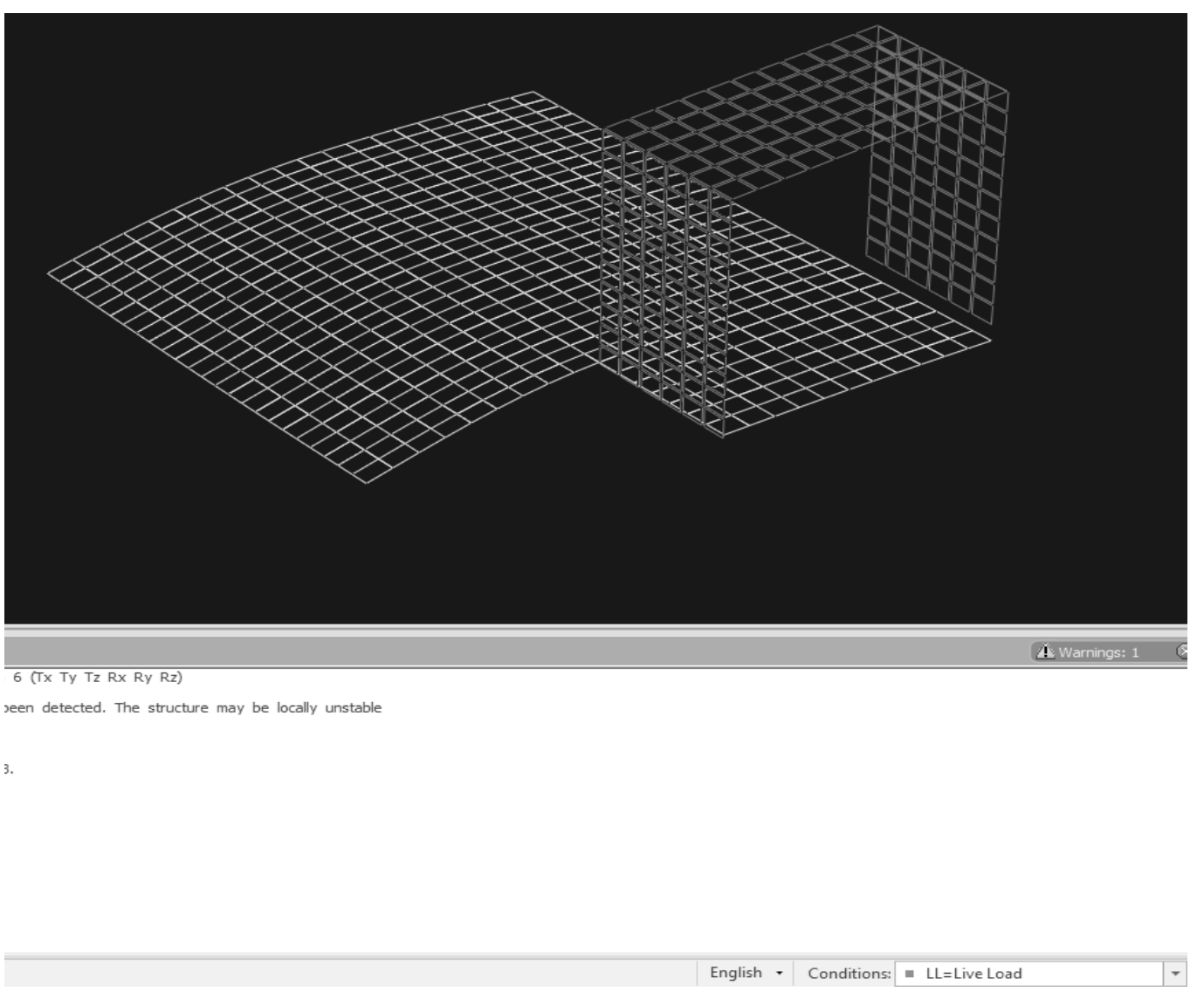

RAM MODEL APPLIED STRESS

Gable End Bracing Check

Wind Area =	17.89333333	sq ft	
C&C Pressure =	60	psf	
Horiz Force =	1073.60	lbs/ft	Force into Main Brace

Model No.	Qty Req'd	Fasteners per Connector (in.)		DF/SP Allowable Loads (160) Perpendicular to Endwall (F_2)				SPF/HF Allowable Loads (160) Perpendicular to Endwall (F_2)				Code Ref.
				Toward GBC		Away from GBC		Toward Anchors		Away from Anchors		
				Gable Brace Angle		Gable Brace Angle		Gable Brace Angle		Gable Brace Angle		
		Gable Brace	Top Plates	40°–45°	46°–60°	40°–45°	46°–60°	40°–45°	46°–60°	40°–45°	46°–60°	
GBC	2	(5) 0.131 x 1½	(7) 0.131 x 2½	650	825	400	305	545	695	335	255	IBC, FL

1. For 1¾" x 3½" (or larger) LVL gable brace, the allowable load at 40° to 45° is 635 lb. towards

Need to reduce force into brace to <650 lbs Try 24" spacing

Wind Area =	13.42	sq ft	
C&C Pressure =	62.40	psf	
Horiz Force =	837.41	lbs	NO GOOD

Try 12" Spacing

Wind Area =	6.71	sq ft	
C&C Pressure =	62.40	psf	
Horiz Force =	418.70	lbs	OK

16 d nail connection to blocking check

16d nail Z =	154	lbs	
Z'=	985.6	lbs	OK

5 8d nail connection to sheathing check

8d nail Z =	106	lbs	
Z' =	848	lbs	OK

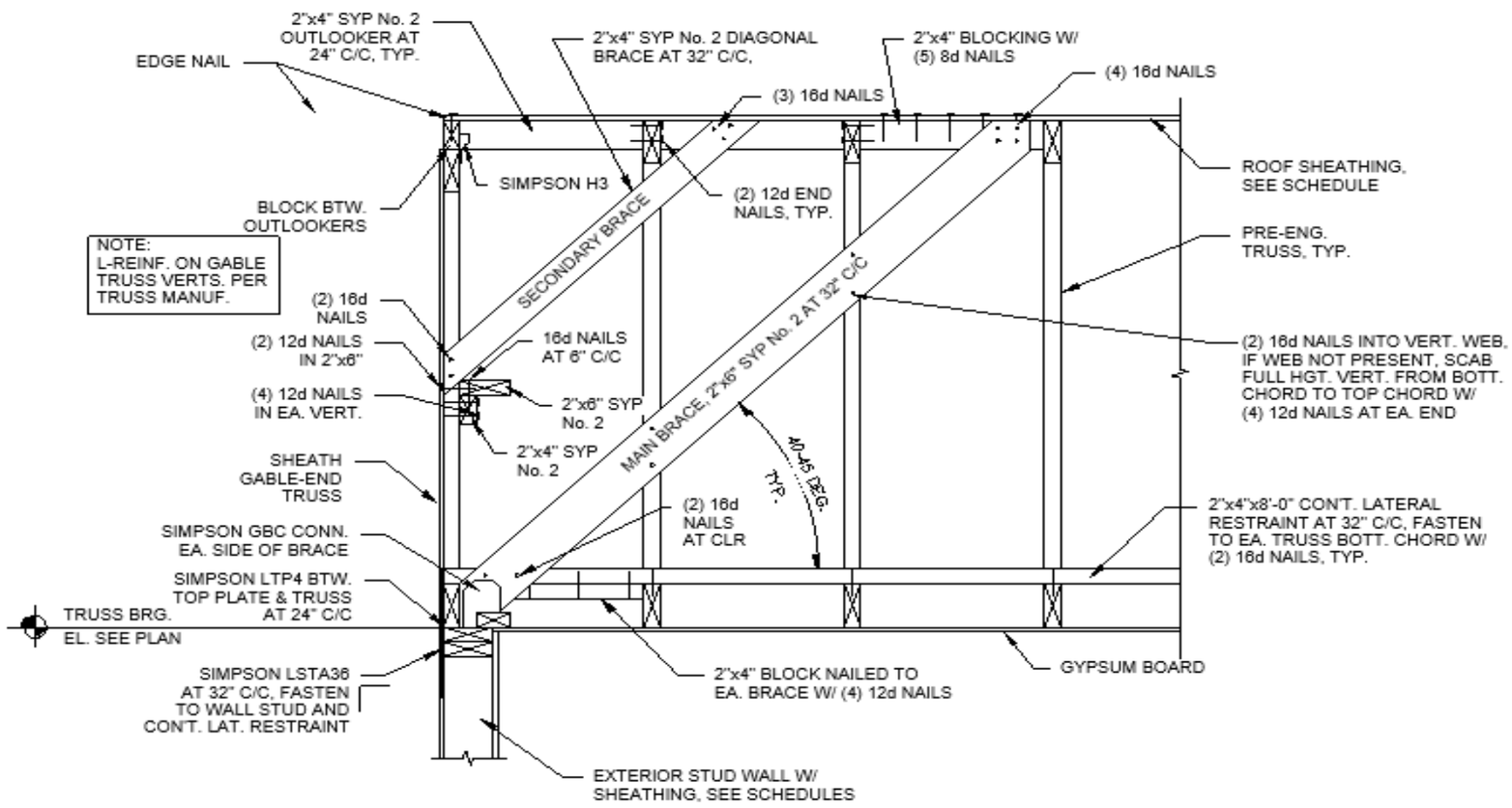

BRICK WALL-BRICK GABLE/SIDING WALL-SIDING GABLE

1 / S-015 TYPICAL GABLE END BRACING DETAILS

3/4" = 1'-0"

PRESCRIPTIVE DESIGN FOR ONE STORY WOOD FRAMED RESIDENTIAL HOME IN PUERTO RICO

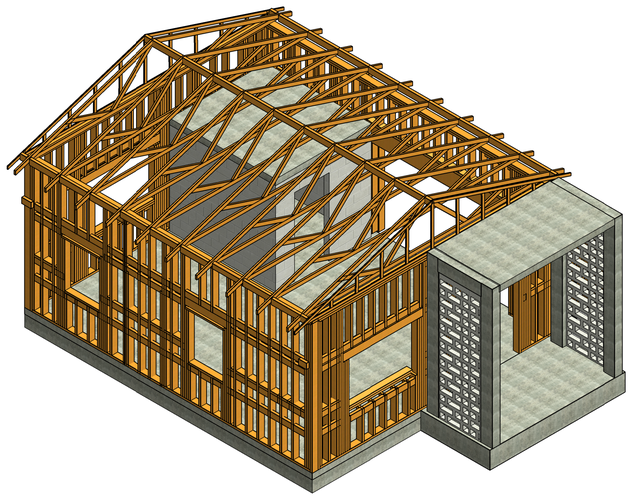

MAIN RESIDENCE

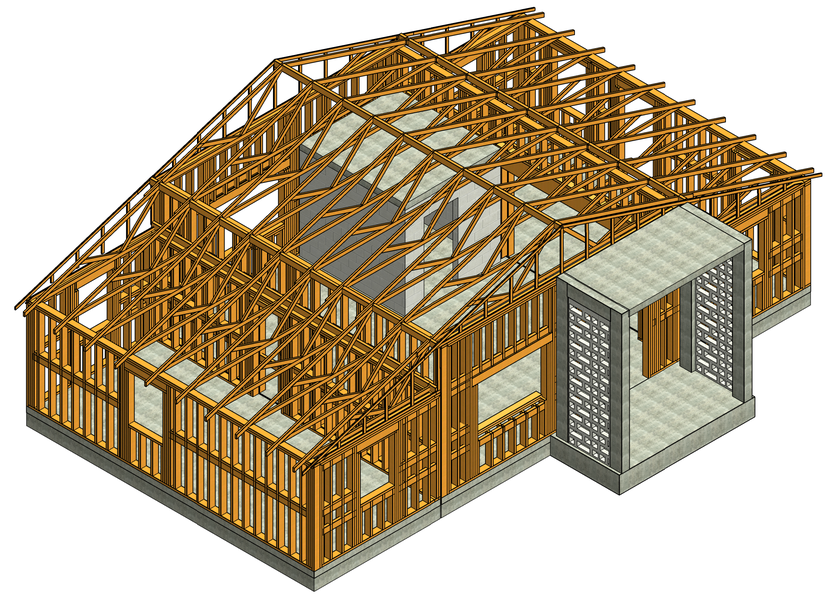

MAIN RESIDENCE WITH OPTIONAL MODULES

PREFACE:

THIS PRESCRIPTIVE HOME DRAWING SET PRESENTS RECOMMENDATIONS FOR THE CONSTRUCTION OF A ONE STORY HOME (PRIMARY STRUCTURE) WITH FUTURE ADDITIONS (MODULES).

THIS GUIDANCE DISPLAYS INFORMATION FOR A PARTICULAR SIZED HOME. THE DESIGN INFORMATION PROVIDED HEREIN INCORPORATES SEISMIC AND WIND CRITERIA BASED UPON THE LATEST PUERTO RICO BUILDING CODE WHICH REFERENCES THE 2018 INTERNATIONAL RESIDENTIAL CODE (2018 IRC), 2018 INTERNATIONAL BUILDING CODE (2018 IBC), AND THE AMERICAN SOCIETY OF CIVIL ENGINEERS ASCE/SEI 7-16: MINIMUM DESIGN LOADS AND ASSOCIATED CRITIERIA FOR BUILDINGS AND OTHER STRUCTURES.

ALL RECOMMENDED DESIGN WORK, INCLUDING THOSE PARTS COVERED BY THIS DOCUMENT, SHALL BE DESIGNED BY A REGISTERED DESIGN PROFESSIONAL SUCH AS A REGISTERED PROFESSIONAL ENGINEER OR A LICENSED ARCHITECT IN PUERTO RICO. WHEN THESE GUIDANCE DRAWINGS ARE USED FOR A PROJECT, THEY SHOULD BE MODIFIED AS NEEDED IN ORDER TO COMPLY WITH ALL OF THE APPLICABLE CODE REQUIREMENTS FOR A GIVEN PROJECT SITE, THEN SIGNED AND SEALED IN ACCORDANCE WITH PUERTO RICO LAWS, BUILDING CODE, AND DEPARTMENT OF ECONOMIC DEVELOPMENT AND COMMERENCE (DDEC).

THE FOLLOWING BOUNDARY CONDITIONS SHALL BE MET IN ORDER TO USE THIS DRAWING SET. THIS DRAWING SET IS NOT VALID IF THE PROJECT PARAMETERS ARE OUTSIDE OF THESE BOUNDARY CONDITIONS:

1. SINGLE STORY BUILDING WITH THE MAXIMUM MEAN ROOF HEIGHT AS SHOWN IN THE DRAWING SET.

2. GABLE ROOF AS SHOWN IN THE DRAWING SET.

3. BUILDING WIDTH AND LENGTH AS SHOWN IN THE DRAWING SET.

DETERMINE SITE SPECIFIC EXPOSURE CATEGORY FIRST AND THEN DETERMINE THE SITE SPECIFIC WIND SPEED AS SHOWN IN THE ATC ONLINE HAZARDS TOOL FOR THE PUERTO RICO BUILDING CODE 2018. CONFIRM THAT THE EXPOSURE AND DESIGN WIND SPEED DO NOT EXCEED THAT SHOWN IN THE DESIGN DATA WITHIN THE DRAWING SET.

SITE SPECIFIC WIND AND SEISMIC INFORMATION FOR PUERTO RICO CAN BE FOUND BY USING THE ONLINE HAZARDS TOOL DEVELOPED BY ATC AND FOUND AT THE WEBSITE: HTTPS://HAZARDS.ATCOUNCIL.ORG/

ALL CONSTRUCTION MUST COMPLY WITH THE PUERTO RICO BUILDING CODE. YOU ARE REQUIRED TO OBTAIN THE NECESSARY BUILDING PERMITS FROM THE DEPARTMENT OF ECONOMIC DEVELOPMENT AND COMMERCE (DDEC). SIGNED AND SEALED DRAWINGS FOR PERMIT MUST BE SUBMITTED TO THE DEPARTMENT OF ECONOMIC DEVELOPMENT AND COMMERCE (DDEC), PERMITS MANAGEMENT OFFICE (OFPe-DDEC).

STRUCTURES LOCATED IN SPECIAL FLOOD HAZARD AREAS SHALL BE DESIGNED BY A REGISTERED DESIGN PROFESSIONAL AND CERTIFIED TO COMPY WITH ASCE 24-14 FLOOD RESISTANT DESIGN AND CONSTRUCTION.

DRAWING INDEX

SHEET NUMBER	SHEET NAME
S-001	Title Sheet
S-002A	General Notes
S-002B	General Notes
S-003	Design Data
S-004	Schedules and Hook Types
S-005	Foundation Plans
S-006	Floor Plan
S-007	Roof Framing Plans
S-008	Primary Structure Elevations
S-009	Primary Structure Elevations
S-010	Expansion Module Structure Elevations
S-011	Full House Section
S-012	Wall Sections
S-013	Foundation and Masonry Details
S-014	Wood Framing Details
S-015	Wood Framing Details
S-016	Window Protection Details

NOT FOR CONSTRUCTION

CONSULTANT:

CLIENT:

PROJECT NAME:

ONE STORY WOOD HOME

NOTE: PRIOR TO CONSTRUCTION CONTACT PUERTO RICO DEPARTMENT OF ECONOMIC DEVELOPMENT AND COMMERCE (DDEC), PERMITS MANAGEMENT OFFICE (OGPe-DDEC) FOR BUILDING REQUIREMENTS IN PUERTO RICO. THIS INFORMATION HAS BEEN DEVELOPED FOR THE USE OF PUERTO RICO RESIDENTS AND IS BELIEVED TO MEET THE PUERTO RICO BUILDING CODE. ALL DRAWINGS MUST BE SEPARATELY APPROVED BY DDEC, PERMITS MANAGEMENT OFFICE UPON SUBMISSION OF A BUILDING PERMIT APPLICATION.

ISSUE LOG

No.	Date	Description

PROFESSIONAL SEALS:

SHEET TITLE:

Title Sheet

SHEET INFORMATION:

JOB No.		Date Issued:	07/29/20
Drawn By:	Author	Sheet Number:	**S-001**
Checked By:	Approver		
QC Review:	Approver		
Phase:			

GENERAL STRUCTURAL NOTES

1.0 GENERAL

1.01 DRAWINGS SHOW TYPICAL AND CERTAIN SPECIFIC CONDITIONS ONLY. FOR DETAILS NOT SPECIFICALLY SHOWN, PROVIDE DETAILS SIMILAR TO THOSE SHOWN.

1.02 VERIFY ALL EXISTING CONDITIONS, DIMENSIONS AND ELEVATIONS BEFORE STARTING WORK. NOTIFY ENGINEER OF RECORD OF ANY DISCREPANCY.

1.03 STRUCTURE IS DESIGNED TO BE SELF-SUPPORTING AND STABLE ONCE IN SERVICE. NO CONSIDERATION FOR STABILITY AND SHORING IS ASSUMED BY THE ENGINEER DURING THE BUILDING PROCESS. IT SHALL BE THE CONTRACTOR'S RESPONSIBILITY TO ENSURE THE STABILITY AND SAFETY OF THE STRUCTURE AND ITS COMPONENTS BY DETERMINING AND IMPLEMENTING ERECTION PROCEDURES AND SEQUENCE OF CONSTRUCTION. THIS INCLUDES TEMPORARY BRACING AND SHORING AS WELL AS SOIL STABILIZATION AND PROTECTIVE MEASURES FOR ADJACENT EXISTING CONSTRUCTION.

1.04 COORDINATE STRUCTURAL CONTRACT DOCUMENTS WITH ARCHITECTURAL, MECHANICAL, ELECTRICAL, PLUMBING AND CIVIL. NOTIFY ENGINEER OF RECORD OF ANY CONFLICT AND/OR OMISSION. CONTRACTOR SHALL MAKE NO DEVIATION FROM DESIGN DRAWINGS WITHOUT WRITTEN APPROVAL OF THE ENGINEER OF RECORD. FOR ADDITIONAL OPENINGS NOT SHOWN ON THE STRUCTURAL DRAWINGS, SEE ARCHITECTURAL, MECHANICAL AND PLUMBING DRAWINGS.

1.05 FOR DIMENSIONS NOT SHOWN, SEE ARCHITECTURAL DRAWINGS.

1.06 REVIEW OF SUBMITTALS AND/OR SHOP DRAWINGS BY THE ENGINEER OF RECORD DOES NOT RELIEVE THE CONTRACTOR OF THE RESPONSIBILITY TO REVIEW AND CHECK SHOP DRAWINGS BEFORE SUBMITTAL TO THE ENGINEER OF RECORD. THE CONTRACTOR REMAINS SOLELY RESPONSIBLE FOR ERRORS AND OMISSIONS ASSOCIATED WITH THE PREPARATION OF SHOP DRAWINGS AS THEY PERTAIN TO MEMBER SIZES, DETAILS AND DIMENSIONS SPECIFIED IN THE CONTRACT DOCUMENTS. CONTRACTOR IS ALSO RESPONSIBLE FOR MEANS, METHODS, TECHNIQUES, SEQUENCES AND PROCEDURES OF CONSTRUCTION AND JOBSITE SAFETY.

1.07 ANY BRAND SPECIFIC MATERIALS MAY BE SUBSTITUTED W/ AN EQUIVALENT PRODUCT BY AN ALTERNATE MANUF. IF APPROVED BY THE ENGINEER OF RECORD, U.N.O. IF AN OPTION IS USED, THE CONTRACTOR SHALL BE RESPONSIBLE FOR ALL NECESSARY CHANGES AND SHALL COORDINATE DETAILS.

1.08 NO STRUCTURAL MEMBER OR COMPONENT SHALL BE CUT, NOTCHED OR OTHERWISE ALTERED UNLESS APPROVED IN WRITING BY THE ENGINEER OF RECORD OR DETAILED IN THIS PLAN SET. THE CONTRACTOR SHALL BE RESPONSIBLE FOR ANY AND ALL COSTS INCURRED BY THE ENGINEER OF RECORD FOR REVIEW OF SUCH DEVIATIONS AND IMPLEMENTATION OF APPROPRIATE SOLUTIONS.

1.09 PRIOR TO COMMENCING WORK, THE GENERAL CONTRACTOR SHALL BE RESPONSIBLE FOR REVIEWING AND COORDINATING WITH THE SUB-CONTRATORS WORK INDICATED ON STRUCTURAL DRAWINGS WITH ARCHITECTURE, SITE WORK, DELEGATED COMPONENTS, AND THE WORK OF OTHER ENGINEERING DISCIPLINES.

1.10 THE ENGINEER OF RECORD SHALL NOT BE CONSTRUED AS HAVING CONTROL, CHARGE, AND RESPONSIBILITY FOR THE ACTS AND OMISSIONS AND FOR FAILURE OF THE CONTRACTOR, SUB-CONTRACTOR, AND OTHER PERSONS PERFORMING THE WORK TO CARRY OUT SUCH WORK IN ACCORDANCE WITH THE STRUCTURAL DRAWINGS AND COLLECTIVE CONTRACT DOCUMENTS.

1.11 PERIODIC SITE OBSERVATION BY THE ENGINEER OF RECORD AND HIS / HER REPRESENTATIVES IS SOLELY FOR THE PURPOSE OF DETERMINING IF THE WORK OF THE CONTRACTOR IS PROCEEDING IN GENERAL ACCORDANCE WITH THE STRUCTURAL DRAWINGS AND SPECIFICATIONS. THIS LIMITED SITE OBSERVATION SHALL NOT BE CONSTRUED AS AN INSPECTION, EXHAUSTIVE, OR CONTINUOUS OBSERVATION TO VERIFY THE QUALITY AND QUANTITY OF THE WORK.

1.12 COMPLETE INSPECTION REQUIREMENTS SHALL BE AS DIRECTED BY THE LOCAL BUILDING DEPARTMENT.

1.13 THE USE OF REPRODUCTIONS OF THESE STRUCTURAL DRAWINGS AND SPECIFICATIONS BY ANY CONTRACTOR, SUBCONTRACTOR, ERECTOR, FABRICATOR OR MATERIAL SUPPLIER IN LIEU OF THE PREPARATION OF SHOP DRAWINGS IS PROHIBITED UNLESS PRIOR WRITTEN APPROVAL IS OBTAINED FROM THE ENGINEER OF RECORD.

1.14 IN THE EVENT THERE IS CONFLICTING INFORMATION BETWEEN THE DRAWINGS, SPECIFICATIONS AND LOCAL CODE APPLICATIONS OR ANY OTHER CONTROLLING AUTHORITY, THE MOST STRINGENT CONDITION SHALL APPLY.

2.0 SOIL PREPARATION AND FOUNDATION

2.01 THE DESIGN OF FOUNDATIONS IS BASED ON AN ALLOWABLE SOIL BEARING PRESSURE OF 1,500 PSF.

2.02 A QUALIFIED GEOTECHNICAL ENGINEER SHALL VERIFY CONDITION AND/OR ADEQUACY OF ALL SUBGRADES, FILLS AND BACKFILLS BEFORE PLACEMENT OF FOUNDATIONS, FOOTINGS, SLABS, WALLS, FILLS, BACKFILLS, ETC. AND SHALL ANTICIPATE SOIL EROSION WHEN DETERMINING EXCAVATION DEPTH.

2.03 SOIL, DEWATERING, AND SITE PREPARATION SHALL BE IN ACCORDANCE WITH THE GEOTECHNICAL REPORT.

2.04 SOIL SUPPORTED FOUNDATIONS:
A. REINFORCING SHALL BE SUPPORTED FROM ABOVE OR WITH 3" SLAB BOSTER WITH PLATE (SBP) AT 4'-0" O.C. MAXIMUM FOR ALL FOUNDATION REINFORCING.

2.05 REMOVE FREE WATER FROM EXCAVATIONS BEFORE PLACING CONCRETE.

2.06 REMOVE EXISTING TOP SOIL, FILL, PAVEMENT OR FOUNDATIONS FROM THE BUILDING AREA.

2.07 BACKFILL BELOW STRUCTURAL ELEMENTS TO BE A GRANULAR MATERIAL HAVING MAXIMUM SIZE OF 3" AND LESS THAN 12% PASSING THE #200 SIEVE SIZE. FILL TO BE PLACED IN LIFTS OF ONE-FOOT OR LESS COMPACTED TO A MINIMUM OF 95% OF THE MAXIMUM DRY DENSITY AS DETERMINED BY THE MODIFIED PROCTOR (ASTM:D1557).

2.08 DO NOT BACKFILL FOUNDATION WALLS UNTIL THE RESTRAINING SLABS OR ADEQUATE BRACING ARE IN PLACE. ALL BACKFILL SHALL BE PLACED AND COMPACTED IN ACCORDANCE WITH THE SPECIFICATION.

2.09 EXTERIOR SLABS SHALL SLOPE AWAY FROM THE STRUCTURE A MINIMUM OF 1/4" PER FOOT UNLESS NOTED OTHERWISE.

2.10 SLABS ON FILL TO BE PLACED OVER A 10-MIL POLYETHYLENE FILM VAPOR BARRIER INSTALLED ON COMPACTED SOIL. CONCRETE POURS TO BE PLACED IN A CHECKERBOARD PATTERN, LIMITED TO 400 SQ. FT. OR 20 FEET IN ANY DIRECTION. AS AN ALTERNATIVE, SLABS MAY BE POURED CONTINUOUSLY, HOWEVER, THEY MUST BE SAWN AS SOON AS THE SLAB WILL SUPPORT THE WEIGHT OF THE SAW AND OPERATOR AND THE SAW BLADE WILL PRODUCE CLEAN CUTS WITHOUT DISLODGING AGGREGATE (7 HOURS MAX). SAW CUT TO BE A MINIMUM OF 1/4 OF THE SLAB DEPTH AND 1/8 INCH WIDTH.

2.11 PROVIDE SOIL POISONING UNDER BUILDINGS FOR TERMITE PROTECTION.

2.12 HOUSES BUILT ON THE SIDES OF STEEP SLOPES REQUIRE SPECIAL DESIGN GUIDANCE. THESE HOMES ARE OFTEN SET ON EXPOSED POSTS OR COLUMNS. WALLS, POSTS, AND COLUMNS SHALL BE PROPERLY BRACED TO PREVENT COLLAPSE DURING AN EARTHQUAKE. FOUNDATIONS SHALL BE PROPERLY EMBEDDED IN CONSIDERATION OF ALL DESIGN FORCES AND POTENTIAL IMPACTS OF EROSION. CONSULT A PUERTO RICO LICENSED PROFESSIONAL ARCHITECT OR ENGINEER FOR DESIGN GUIDANCE IN SUPPORTING A HOME ON A STEEP SLOPE. IT IS RECOMMENDED TO PROVIDE ADDITIONAL ANCHORAGE FOR EACH FLOOR SYSTEM TO THE UPHILL FOUNDATION AND SUPPLEMENTAL ANCHORAGE, STRAPPING, AND BRACING OF CRIPPLE WALLS.

2.13 A REGISTERED GEOTECHNICAL ENGINEER SHALL PERFORM A SLOPE STABILITY ANALYSIS ON STEEP SLOPES AND ADDITIONAL STABILIZING DESIGN OF KNEEWALLS OR WIDER GRADE BEAMS MAY BE REQUIRED IN THE DESIGN.

3.0 REINFORCED CONCRETE

3.01 PRIOR TO CASTING FOUNDATIONS, PREPARE THE SITE IN ACCORDANCE WITH PLANS, SPECIFICATIONS AND REQUIRED COMPACTION.

3.02 ALL CONCRETE WORK SHALL CONFORM TO ACI 301-10, SPECIFICATIONS FOR STRUCTURAL CONCRETE FOR BUILDINGS. DESIGN IS BASED ON ACI 318-14, BUILDING CODE REQUIREMENTS FOR REINF. CONCRETE.

3.03 UNLESS NOTED OTHERWISE, ALL CONCRETE SHALL BE NORMAL WEIGHT AND HAVE THE FOLLOWING MINIMUM 28-DAY COMPRESSIVE STRENGTHS:

	f'c
FOUNDATIONS	3,000 PSI
SLABS-ON-GRADE	3,000 PSI
WALLS	3,000 PSI

3.04 USE OF CALCIUM CHLORIDE, CHLORIDE IONS OR OTHER SALTS IN CONCRETE IS NOT PERMITTED.

3.05 CHAMFER OR ROUND ALL EXPOSED CORNERS MINIMUM 3/4".

3.06 DETAIL CONCRETE REINFORCEMENT AND ACCESSORIES IN ACCORDANCE WITH ACI 315-18, DETAILING MANUAL.

3.07 REINFORCING STEEL SHALL CONFORM TO ASTM A615, GRADE 60, UNLESS NOTED OTHERWISE.

3.08 WELDED WIRE FABRIC (MESH) SHALL CONFORM TO ASTM A185 AND SHALL BE PROVIDED IN FLAT SHEETS. LAP EDGES 3 CROSS WIRES MINIMUM.

3.09 PROVIDE CONTINUOUS REINFORCEMENT WHEREVER POSSIBLE; SPLICE ONLY AS SHOWN OR APPROVED; STAGGER SPLICES WHERE POSSIBLE; USE FULL TENSION SPLICE (CLASS "B") FOR CONTINUOUS REINF. AND MATCHING DOWELS U.N.O. LAP SPLICES SHALL BE 57 BAR DIAMETERS FOR BARS SMALLER THAN #7 AND 72 BAR DIAMETERS FOR #7 & LARGER.

3.10 REINFORCING STEEL SHALL HAVE THE FOLLOWING CONCRETE COVER UNLESS NOTED OTHERWISE:
A. CONCRETE CAST AGAINST EARTH (NOT FORMED) . . 3"
B. FORMED CONCRETE EXPOSED TO THE EARTH OR WEATHER
#6 THROUGH #18 BARS . . . . . 2"
#5 BARS AND SMALLER . . . . . 1½"
C. CONCRETE NOT EXPOSED TO EARTH OR WEATHER
SUSPENDED SLABS AND WALLS
#14 THROUGH #18 BARS. . . . . 1½"
#11 BARS AND SMALLER. . . . . 1"
BEAMS (STIRRUPS) AND COLUMNS (TIES) . . . . . 1½"

3.11 DO NOT PLACE PIPES OR DUCTS EXCEEDING ONE-THIRD THE SLAB OR WALL THICKNESS WITHIN THE SLAB OR WALL UNLESS SPECIFICALLY SHOWN AND DETAILED ON STRUCTURAL DRAWINGS. ANY PIPES SHALL BE BETWEEN THE OUTER HORIZONTAL AND VERTICAL LAYERS OF REINF.

3.12 DO NOT WELD OR TACK WELD REINFORCING STEEL UNLESS APPROVED OR DIRECTED BY THE ENGINEER OF RECORD.

3.13 REINFORCE SLAB-ON-GRADE AT ALL PENETRATIONS AND AT RE-ENTRANT CORNERS. PLACE THREE #3x3'-0 AROUND FLOOR DRAINS. PLACE #4x4'-0" (MIN.) AT RE-ENTRANT CORNERS. HOLD REINFORCING 1" CLEAR FROM TOP OF CONCRETE.

3.14 WALLS AND OTHER INTERSECTING ELEMENTS SHALL HAVE CORNER BARS TO PROVIDE CONTINUITY. USE CONCRETE STEEL REINFORCING INSTITUTE (CRSI) STANDARDS OR AS SHOWN ON THE DRAWINGS.

3.15 FINISH INTERIOR SLAB ON GRADES WITH A TROWEL FINISH.

4.0 SAWN LUMBER

4.01 DESIGN STANDARDS:

AMERICAN WOOD COUNCIL, "NATIONAL DESIGN SPECIFICATION (NDS) FOR WOOD CONSTRUCTION" (ANSI/AWC NDS-2018) WITH "NDS SUPPLEMENT", 2018 EDITION.

AMERICAN SOFTWOOD LUMBER STANDARD VOLUNTARY PRODUCT STANDARD PS20-15.

APA E30– THE ENGINEERED WOOD ASSOCIATION, "ENGINEERED WOOD CONSTRUCTION GUIDE", AND D510 "PANEL DESIGN SPECIFICATION", LATEST EDITIONS.

4.02 ALL WOOD FRAMING MEMBERS INCLUDING BUT NOT LIMITED TO WALL STUDS AND JOISTS, ARE INTENDED TO ACT AS A SYSTEM AS DETAILED IN THE STRUCTURAL DRAWINGS. IT IS THE RESPONSIBILITY OF THE CONTRACTOR TO ENSURE SAFETY AND STABILITY OF THE WOOD FRAMING SYSTEMS (I.E. TEMPORARY BRACING IF REQUIRED) DURING CONSTRUCTION.

4.03 ALL SAWN LUMBER SHALL CONFORM TO THE AMERICAN SOFTWOOD LUMBER STANDARD, PS20-15. LUMBER SIZES SHOWN ARE NOMINAL UNLESS NOTED OTHERWISE. LUMBER SHALL BE OF THE SPECIES AND GRADE SHOWN BELOW, UNLESS NOTED OTHERWISE:

MEMBER	GRADE	SPACING
WALL STUDS	SOUTHERN YELLOW PINE No.2	REF. PLANS
RAFTERS/JOISTS	SOUTHERN YELLOW PINE No.2	REF. PLANS
POST/COLUMNS	SOUTHERN YELLOW PINE No.2	REF. PLANS
SILL PLATE	SOUTHERN YELLOW PINE No.2	
DOUBLE TOP PLATE	SOUTHERN YELLOW PINE No.2	

4.04 ALL ATTACHMENTS OF WOOD FRAMING SHALL NOT BE LESS THAN THAT DESCRIBED IN TABLE "FASTENING SCHEDULE" ON SHEET S-004.

4.05 STORAGE OF ALL LUMBER AND TIMBER ON SITE SHALL BE KEPT OFF OF THE GROUND, UNDER COVER, AND PROTECTED FROM DAMAGE.

4.06 ALL LUMBER IN CONTACT WITH THE GROUND OR CONCRETE SHALL BE PRESSURE TREATED.

4.07 ALL FASTENERS FOR PRESERVATIVE-TREATED AND FIRE-RETARDENT-TREATED WOODS AND ALL OTHER WOODS SHALL BE OF HOT-DIPPED ZINC COATED GALVANIZED STEEL OR STAINLESS STEEL. ALL FASTENERS SHALL FOLLOW CURRENT MANUFACTURER'S GUIDELINES BASED ON WEATHER EXPOSURE. STAINLESS STEEL OR HOT-DIPPED GALVANIZED FASTENERS SHALL BE USED TO MATCH THE CONNECTOR TYPE. AT A MINIMUM ALL FASTENERS SHALL BE HOT-DIPPED GALVANIZED MEETING ASTM A153. WHEN FASTENERS ARE USED AT PERMANENTLY EXPOSED EXTERIOR AREAS, FASTENERS SHALL BE STAINLESS STEEL. FOR HOMES LOCATED WITHIN 1 MILE OF THE OCEAN, FASTENERS SHALL BE HOT-TIPPED GALVANIZED G185 OR BE IN ACCORDANCE WITH FEMA TECHNICAL BULLETIN 8.

4.08 ALL METAL HARDWARE AND FRAMING ACCESSORIES SHALL BE MANUFACTURED BY SIMPSON STRONG-TIE COMPANY, MITEK USP, OR APPROVED EQUAL. ALL ITEMS SHALL BE INSTALLED PER THE MANUFACTURER'S INSTALLATION REQUIREMENTS. ALL CONNECTORS SHALL BE MINIMUM HOT-DIP GALVANIZED IN ACCORDANCE WITH ASTM A653, ASTM A123, OR HIGHER STANDARDS. STAINLESS STEEL CONNECTORS MAY ALSO BE USED IN LIEU OF HOT-DIP GALVANIZED CONNECTORS. ALL NAIL/BOLT HOLES SHALL BE FILLED WITH THE RECOMMENDED FASTENER UNLESS NOTED OTHERWISE.

4.09 ALL WALLS SHALL HAVE DOUBLE TOP PLATES AND SHALL BE SPLICED PER THE TYPICAL TOP PLATE SPLICE DETAIL ON S-014, UNLESS NOTED OTHERWISE. TOP PLATES AT WALL INTERSECTIONS SHALL BE LAPPED AND NAILED WITH (3) 16d NAILS.

4.10 WHERE ROOF MEMBERS OR ROOF TRUSSES ARE CONNECTED TO EXTERIOR WALLS OR WALLS W/ PLYWOOD SHEATHING, THE SPECIFIED HURRICANE CLIP SHALL BE PLACED ON THE SIDE OF THE WALL WITH SHEATHING.

4.11 HOLES FOR BOLTS SHALL BE DRILLED WITH A BIT OF THE SAME NOMINAL DIAMETER AS THE BOLT + 1/16". LEAD HOLES FOR LAG SCREWS SHALL BE DRILLED PER NDS.

4.12 ALL BOLTS, CARRIAGE BOLTS, LAG SCREWS, EXPANSION BOLTS, AND EPOXY BOLTS SHALL BE INSTALLED WITH STANDARD CUT WASHERS AND NUTS THAT BEAR DIRECTLY ON THE WOOD. ALL NUTS SHALL BE TIGHTENED AT THE TIME OF INSTALLATION AND RE-TIGHTENED IF NECESSARY, DUE TO WOOD SHRINKAGE, PRIOR TO CLOSE-IN OR AT THE COMPLETION OF THE PROJECT. BOLTS AND LAG SCREWS SHALL CONFORM TO ANSI/ASME STANDARD B18.2.1. WOOD SCREWS SHALL CONFORM TO B18.6.1. ALL BOLTS SHALL CONFORM TO ASTM A307 GRADE A UNLESS NOTED OTHERWISE. ALL SHALL BE GALVANIZED.

THE MINIMUM STRENGTHS FOR LAG SCREWS AND WOOD SCREWS SHALL BE AS FOLLOWS:

WOOD SCREW DIAMETER-INCHES	MIN. BENDING YIELD STRENGTH (PSI)
0.138 (#6)	100,000
0.151 (#7)	90,000
0.164 (#8)	90,000
0.177 (#9)	90,000
0.190 (#10)	80,000
0.216 (#12)	80,000
0.246 (#14)	70,000

WOOD SCREW DIAMETER-INCHES	MIN. BENDING YIELD STRENGTH (PSI)
1/4"	70,000
5/16"	60,000
3/8" AND GREATER	45,000

4.13 WOOD STUDS IN EXTERIOR WALLS AND BEARING PARTITIONS MAY BE CUT OR NOTCHED TO A DEPTH NOT EXCEEDING ¼ OF ITS WIDTH, PROVIDED NOT MORE THAN TWO SUCCESSIVE STUDS ARE NOTCHED OR CUT. BUNDLED STUDS UNDER POINTS OF CONCENTRATED LOADS SHALL NOT BE CUT OR NOTCHED. CUTTING AND NOTCHING OF STUDS TO A DEPTH NOT GREATER THAN 40% OF THE WIDTH OF THE STUD IS PERMITTED IN NON-BEARING PARTITIONS SUPPORTING NO LOADS OTHER THAN THE WEIGHT OF THE PARTITION.

4.14 A HOLE MAY BE BORED IN A WOOD STUD UP TO A DIAMETER OF 33% OF THE STUD WIDTH. BORED HOLES NOT GREATER THAN 60% OF THE WIDTH OF THE STUD ARE PERMITTED IN NON-BEARING PARTITIONS OR IN ANY WALL WHERE EACH BORED STUD IS DOUBLED, PROVIDED NOT MORE THAN TWO SUCCESSIVE DOUBLE STUDS ARE BORED. IN NO CASE, SHALL THE EDGE OF THE BORED HOLE BE NEARER THAN 5/8" TO THE EDGE OF THE STUD, BORED HOLES SHALL NOT BE LOCATED AT THE SAME SECTION OF THE STUD AS A CUT OR NOTCH.

4.15 END NOTCHES NOT EXCEEDING ¼ THE DEPTH ARE PERMITTED FOR 2X FLOOR JOISTS OR RAFTERS. TAPER CUT FROM THE REDUCED DEPTH OF THE MEMBER TO THE FULL DEPTH AT A MINIMUM SLOPE OF (1) HORIZ./(1) VERT. DO NOT SQUARE CUT AN END NOTCH.

4.16 INTERIOR NOTCHES NOT EXCEEDING 1/6 THE DEPTH OF A 2X FLOOR JOIST OR RAFTER SHALL BE PERMITTED ONLY IN THE OUTER THIRD OF ANY SPAN. NOTCHES ARE NOT PERMITTED IN THE MIDDLE THIRD OF ANY SPAN NOR IN ANY LINTEL MEMBERS.

4.17 THE LENGTH OF NOTCHES IN FLOOR JOISTS SHALL NOT EXCEED 1/3 THE JOIST DEPTH.

4.18 HOLES BORED IN FLOOR JOISTS OR RAFTERS SHALL NOT BE WITHIN 2 INCHES OF THE TOP OR BOTTOM AND THE DIAMETER OF ANY SUCH HOLE SHALL NOT EXCEED 1/3 THE DEPTH OF THE MEMBER. HOLES SHALL NOT OCCUR WITHIN 12" OF THE EDGE OF ANY BEARING SUPPORT OR CONNECTION.

4.19 WHEN NAILS ARE USED AT PERMANENTLY EXPOSED EXTERIOR AREAS, NAILS SHALL BE STAINLESS STEEL (TYPE 316). NAILS THAT ARE NOT EXPOSED TO THE ELEMENTS BUT IN CONTACT WITH PRESERVATIVE TREATMENT LUMBER SHALL BE MINIMUM HOT-DIP GALVANIZED MEETING ASTM A153. ALL NAILS FOR STRUCTURAL WORK SHALL BE COMMON WIRE NAILS UNLESS NOTED OR DETAILED OTHERWISE MEETING ASTM F1667. HOLES SHALL BE PRE-DRILLED WHERE NECESSARY TO PREVENT SPLITTING. NAILS SHALL HAVE THE MINIMUM PROPERTIES SPECIFIED IN THE TABLE BELOW:

NAIL TYPE	SHANK DIAMETER-INCHES	MIN. PENETRATION-INCHES	MIN. BENDING YIELD STRENGTH (PSI)
6d	0.113	1.25	100,000
8d box	0.113	1.38	100,000
8d	0.131	1.38	100,000
10d box	0.128	1.50	100,000
10d	0.148	1.50	90,000
12d box	0.128	1.48	100,000
12d	0.148	1.48	90,000
16d box	0.135	1.63	100,000
16d	0.162	1.63	90,000
20d	0.192	1.92	80,000

5.0 WOOD STRUCTURAL PANELS

5.01 STRUCTURAL WOOD PANELS SHALL CONFORM TO THE REQUIREMENTS OF ONE OF THE FOLLOWING STANDARDS AND PUBLICATIONS:

A. U.S. PRODUCT STANDARD PS1-95 FOR CONSTRUCTION AND INDUSTRIAL PLYWOOD.
B. U.S. PRODUCT STANDARD PS2-92 PERFORMANCE STANDARD FOR WOOD BASED STRUCTURAL USE PANELS.
C. APA PRP-108 PERFORMANCE STANDARDS.

5.02 ROOF AND WALL PANELS SHALL BE APA RATED, EXPOSURE 1, OSB WITH A MIN. 48/24 SPAN RATING UNLESS NOTED OTHERWISE ON THE DRAWINGS. SHEATHING SHALL BE EXTERIOR GRADE WHERE EITHER SIDE OF SHEATHING IS PERMANENTLY EXPOSED TO WEATHER. SHEATHING SHALL RUN CONTINUOUS OVER AT LEAST THREE SPANS.

5.03 ALL ROOF SHEATHING SHALL BE INSTALLED WITH THE FACE GRAIN PERPENDICULAR TO THE SUPPORTS. ROOF SHEATHING SHALL BE NAILED AND GLUED TO WOOD FRAMING IN ACCORDANCE WITH THE PUERTO RICO CODE AND AMERICAN PLYWOOD ASSOCIATION (APA) SPECIFICATION AFG-01, ADHESIVES FOR FIELD GLUING PLYWOOD TO WOOD FRAMING.

5.04 ALL SHEATHING PANELS SHALL BE INSTALLED WITH END JOINTS STAGGERED UNLESS NOTED OTHERWISE.

5.05 STAINLESS STEEL (TYPE 316) NAILS SHALL BE USED AT PERMANENTLY EXPOSED EXTERIOR AREAS. ALL NAILS THAT ARE NOT EXPOSED TO THE ELEMENTS BUT IN CONTACT WITH PRESERVATIVE TREATMENT LUMBER SHALL BE MINMUM HOT-DIPPED GALVANIZED MEETING ASTM A153.

5.06 3x BLOCKING SHALL BE PROVIDED AT PLYWOOD SHEATHED INTERIOR AND EXTERIOR WALLS. BLOCKING SHALL BE INSTALLED AT ALL WALL AND ROOF PANEL EDGES PERPENDICULAR TO FRAMING MEMBERS AND AS SHOWN ON PLAN.

6.0 PRE-FABRICATED WOOD TRUSSES

6.01 DESIGN STANDARDS:

TRUSS PLATE INSTITUTE. "NATIONAL DESIGN STANDARD FOR METAL-PLATE CONNECTED WOOD TRUSS CONSTRUCTION" (ANSI/TPI 1-2014)

6.02 MINIMUM DESIGN LOADS:

		ROOF TRUSSES
TOP CHORD	LIVE LOAD:	20 PSF
	SUPERIMPOSED DEAD LOAD:	5 PSF
BOTTOM CHORD	LIVE LOAD:	20 PSF
	SUPERIMPOSED DEAD LOAD:	5 PSF
DEFLECTION:	LIVE LOAD:	L/240 MAX.
	TOTAL LOAD:	L/180 MAX.

WOOD TRUSSES SHALL BE DESIGNED TO RESIST DOWNWARD AND UPLIFT WIND PRESSURE NORMAL TO THE TOP CHORD. SEE DESIGN DATA DRAWING FOR WIND LOAD CRITERIA. ROOF TRUSS AT GABLE END TO BE DESIGNED FOR LATERAL WIND PRESSURE. SEE PLANS FOR GABLE END BRACING DETAILS.

6.03 FABRICATION AND PLACEMENT REQUIREMENTS:
ALL CONNECTIONS BETWEEN TRUSSES AND/OR TRUSSES AND CONVENTIONAL FRAMING SHALL BE DESIGNED AND DETAILED BY THE TRUSS FABRICATOR. TRUSSES SHALL BE ASSEMBLED, HANDLED, STORED, AND ERECTED IN ACCORDANCE WITH STANDARDS OF THE TRUSS PLATE INSTITUTE. BOTTOM CHORD BRACING AND BRIDGING SHALL BE LOCATED AND DESIGNED BY THE TRUSS FABRICATOR AND INSTALLED BY THE TRUSS ERECTOR IN CONFORMANCE WITH THE "BUILDING COMPONENT SAFETY INFORMATION, BCSI 2013 GUIDELINE" PUBLISHED BY THE TRUSS PLATE INSTITUTE.

6.04 SHOP DRAWINGS:
SHOP DRAWINGS SEALED BY AN ENGINEER REGISTERED IN PUERTO RICO SHALL BE SUBMITTED FOR REVIEW, DESCRIBING ALL DIMENSIONS, SIZES AND GRADE OF LUMBER, DESIGN LOADS, FORCES, REACTIONS, AND CONNECTIONS FOR ALL MEMBERS OF EACH TRUSS AND TRUSS CONNECTIONS.

6.05 THE TRUSS MANUFACTURER SHALL DESIGN THE TRUSSES AND GIRDER TRUSSES FOR THE LOADS INDICATED ON THE STRUCTURAL DRAWINGS. SPECIAL LOAD CONSIDERATIONS, SUCH AS OVERFRAMING, ETC. SHALL BE ACCOUNTED FOR IN THE DESIGN.

6.06 THE TRUSS MANUFACTURER SHALL ACCEPT FULL RESPONSIBILITY FOR THE DESIGN. THE TRUSS ENGINEER SHALL PREPARE DESIGN CALCULATIONS AND DRAWINGS, WHICH SHALL BE SEALED, SIGNED, AND DATED BY THE RESPONSIBLE PROFESSIONAL ENGINEER REGISTERED IN PUERTO RICO.

6.07 THE DESIGN SHALL INCLUDE INTERNAL CONNECTIONS AND CONNECTIONS BETWEEN TRUSSES. CONNECTIONS TO OTHER STRUCTURAL MEMBERS AND ARCHITECTURAL SYSTEMS SHALL BE INCLUDED. TYPICAL DETAILS OF CONNECTIONS SHALL BE SHOWN.

6.08 THE MEMBER SIZE AND PROPERTIES FOR EACH MEMBER USED SHALL BE SHOWN, CLEARLY INDICATING WHERE EACH MEMBER IS BEING USED.

6.09 PARTICULAR ATTENTION SHALL BE GIVEN TO HEEL HEIGHTS AND TOP CHORD SLOPES TO ENSURE THAT THE FASCIA DETAILS ARE CONSISTENT, ALIGNED, AND IN ACCORDANCE WITH THE ARCHITECTURAL DRAWINGS.

6.10 THE MAXIMUM SPACING OF THE TRUSSES SHALL BE 24 INCHES FOR ROOF TRUSSES. THE SELECTED SPACING MUST BE COORDINATED WITH THE TRUSS ENGINEER, THE MECHANICAL ENGINEER, THE FABRICATOR, THE DECKING, HVAC AND ELECTRICAL SUBCONTRACTORS, ERECTORS, DRYWALLER, AND ANY OTHER RELATED SUBCONTRACTORS. THE SPACING SHALL BE DENOTED IN SHOP DRAWINGS FOR EACH TRADE.

6.11 A SAMPLE SUBMITTAL OF THE TYPICAL TRUSS AND TRUSS GIRDER TYPES SHALL BE SUBMITTED FOR PRELIMINARY REVIEW PRIOR TO COMPLETION OF DESIGN CALCULATIONS AND DRAWINGS.

6.12 COMPLETE ERECTION PLANS AND DETAILS SHALL BE SUBMITTED TO EACH TRADE FOR REVIEW.

6.13 THE TRUSS ENGINEER SHALL BE RESPONSIBLE FOR ANY FIELD COORDINATION ISSUES WHICH MAY ARISE REGARDING THE TRUSSES, OPENINGS IN TRUSSES, AND CONNECTIONS OF TRUSSES.

6.14 TRUSS ENGINEER SHALL VERIFY THAT DETAILS OF CONNECTIONS SHOWN ARE APPROPRIATE FOR THE TRUSS DESIGN. IF NOT, THE PROPOSED REVISIONS TO DETAILS SHALL BE SUBMITTED.

6.15 SHIM PLATES SHALL BE INSTALLED AS REQUIRED TO PROVIDE A POSITIVE BEARING SURFACE BETWEEN THE TRUSSES AND WALLS. EACH TRUSS SHALL BEAR ON EACH WALL WITH WHICH IT INTERSECTS AS SHOWN ON THE PLAN AND IN THE LOADING DIAGRAMS. UNLESS SPECIFICALLY NOTED, THERE SHALL NOT BE ANY SPACE BETWEEN THE TRUSSES AND THE STRUCTURAL WALLS.

6.16 LOADS SHOWN ABOVE ARE SUPERIMPOSED LOADS AND DO NOT INCLUDE THE TRUSS SELF-WEIGHT. TRUSS MANUFACTURER SHALL CONSIDER THE TRUSS SELF-WEIGHT IN THE TRUSS DESIGN.

6.17 TRUSS TOP CHORD SHALL BE A MINIMUM 3x MEMBER. TRUSS TO STOP AT WALL TOP PLATES. SEE 4/S-015 FOR SISTERED OVERHANG MEMBER TO BE DESIGNED BY TRUSS MANUFACTURER.

ALL CONSTRUCTION MUST COMPLY WITH THE PUERTO RICO BUILDING CODE. YOU ARE REQUIRED TO OBTAIN THE NECESSARY BUILDING PERMITS FROM THE DEPARTMENT OF PLANNING AND RESOURCES. SIGNED AND SEALED DRAWINGS FOR PERMIT MUST BE SUBMITTED TO THE DEPARTMENT OF ECONOMIC DEVELOPMENT AND COMMERCE (DDEC), PERMITS MANAGEMENT OFFICE.

STRUCTURES LOCATED IN SPECIAL FLOOD HAZARD AREAS SHALL BE DESIGNED BY A REGISTERED DESIGN PROFESSIONAL AND CERTIFIED TO COMPY WITH ASCE 24-14 FLOOD RESISTANT DESIGN AND CONSTRUCTION.

NOT FOR CONSTRUCTION

CONSULTANT:

CLIENT:

PROJECT NAME:

ONE STORY WOOD HOME

NOTE: PRIOR TO CONSTRUCTION CONTACT PUERTO RICO DEPARTMENT OF ECONOMIC DEVELOPMENT AND COMMERCE (DDEC), PERMITS MANAGEMENT OFFICE (OGPe-DDEC) FOR BUILDING REQUIREMENTS IN PUERTO RICO. THIS INFORMATION HAS BEEN DEVELOPED FOR THE USE OF PUERTO RICO RESIDENTS AND IS BELIEVED TO MEET THE PUERTO RICO BUILDING CODE. ALL DRAWINGS MUST BE SEPARATELY APPROVED BY DDEC, PERMITS MANAGEMENT OFFICE UPON SUBMISSION OF A BUILDING PERMIT APPLICATION.

ISSUE LOG

No.	Date	Description

PROFESSIONAL SEALS:

SHEET TITLE:

General Notes

SHEET INFORMATION:

JOB No.	Date Issued: 5/15/2020
Drawn By:	Sheet Number:
Checked By:	**S-002A**
QC Review:	
Phase:	

7.0 MASONRY

7.01 CONCRETE MASONRY DESIGN AND CONSTRUCTION SHALL CONFORM TO TMS 402/602-16 BUILDING CODE REQUIREMENTS FOR MASONRY STRUCTURES.

7.02 PROVIDE NORMAL WEIGHT, HOLLOW, LOAD-BEARING CONCRETE MASONRY UNITS (CMU) CONFORMING TO ASTM C90, GRADE N, TYPE II.

7.03 PROVIDE MASONRY CONSTRUCTION WITH MINIMUM COMPRESSIVE STRENGTH, f'm = 1,900 PSI.

7.04 PROVIDE TYPE "S" MORTAR IN ACCORDANCE WITH ASTM C270.

7.05 VERTICAL REINFORCING SHALL BE HELD IN POSITION WITH BAR POSITIONERS AT TOP OF THE GROUT POUR AT SPACINGS AS SHOWN ON THE PLANS.

7.06 PROVIDE HORIZONTAL JOINT REINFORCEMENT COMPLYING WITH ASTM A82, NO. 9 GAUGE OR HEAVIER, LADDER TYPE, ZINC COATED, PLACED 16" ON CENTER, UNLESS NOTED OTHERWISE. LADDER RUNGS SHALL BE POSITIONED TO COMPLETELY CLEAR CELL OPENINGS. LAP JOINT REINF. 1 FULL CROSS WIRE SPACING PLUS 2" (18" MIN FOR CROSS WIRE SPACING OF 16" ON CENTER), BUT NOT LESS THAN 12".

7.07 PROVIDE RUNNING BONDS WITH VERTICAL JOINTS LOCATED AT CENTER OF MASONRY UNITS IN THE ALTERNATE COURSE BELOW.

7.08 PROVIDE FOUNDATION DOWELS WITH HOOKS SIZED AND SPACED TO MATCH CMU VERTICAL REINFORCING. DOWELS SHALL LAP WALL VERTICALS SEE FASTENING SCHEDULES FOR MASONRY LAP SPLICE REQUIREMENTS.

7.09 REINFORCING STEEL SHALL CONFORM TO ASTM A615, GRADE 60, UNLESS NOTED OTHERWISE.

7.10 PROVIDE FINE GROUT FOR REINFORCED MASONRY IN ACCORDANCE WITH ASTM C476 WITH MINIMUM 28-DAY COMPRESSIVE STRENGTH OF 2,000 PSI. GROUT SHALL BE OF FLUID CONSISTENCY, WHICH MEANS AS FLUID AS POSSIBLE FOR POURING WITHOUT SEGREGATION OF THE CONSTITUENT PARTS. GROUT SLUMP SHALL BE 8 TO 10 INCHES. WATER CEMENT RATIO SHALL BE REDUCED AND WATER REDUCERS USED AS REQUIRED TO MAINTAIN SLUMP WHEN PLACED IN LOW ABSORPTION CMU. FILL ALL CELLS BELOW GRADE WITH GROUT. ALL GROUT SHALL BE CONSOLIDATED AT THE TIME OF POURING BY VIBRATING AND THEN RECONSOLIDATED AGAIN BY PUDDLING LATER, BEFORE PLASTICITY IS LOST. TYPICALLY WITHIN 10 TO 15 MINUTES. WHEN GROUTING S STOPPED FOR ONE HOUR OR LONGER, CONSTRUCTION JOINTS SHALL BE FORMED BY STOPPING THE POUR OF GROUT 1 1/2" BELOW THE TOP OF THE UPPERMOST UNIT.

7.11 ALL VERTICAL REINFORCING SHALL HAVE A STANDARD HOOK WHEN TERMINATING INTO A BOND BEAM.

7.12 ALL VERTICAL REINFORCING SHALL BE LOCATED IN GROUTED CELLS.

8.0 MISCELLANEOUS

8.01 SUBSTITUTION OF EXPANSION ANCHORS FOR ADHESIVE ANCHORS OR EMBEDDED ANCHORS SHOWN ON THE DRAWINGS WILL NOT BE PERMITTED UNLESS APPROVED BY THE ENGINEER OF RECORD IN ADVANCE.

8.02 THE CONTRACTOR SHALL PROVIDE THE FOLLOWING SERVICES AS PART OF THE CONSTRUCTION SCOPE OF WORK:
- A. VERIFICATION OF ALL DIMENSIONS, ELEVATIONS, OPENING SIZES, MECHANICAL EQUIPMENT WEIGHTS PRIOR TO STARTING WORK.
- B. REMOVE ALL ABANDONED FOUNDATIONS, UTILITIES, PIPELINES, ETC. THAT INTERFERE WITH NEW CONSTRUCTION.
- C. REVIEW AND APPROVE ALL SHOP DRAWINGS PRIOR TO SUBMITTAL, NOTING CHANGES MADE WHICH DO NOT COMPLY WITH DESIGN DRAWINGS.
- D. PROVIDE TEMPORARY BRACING AND SHORING TO PREVENT EXCESSIVE DEFLECTIONS AND DAMAGE DURING CONSTRUCTION. DESIGN OF TEMPORARY BRACING AND SHORING SHALL BE THE RESPONSIBILITY OF THE CONTRACTOR.
- E. SUPPORT OF CEILING SYSTEMS, FOLDING PARTITIONS, TOILET PARTITIONS, COUNTERS, MISCELLANEOUS EQUIPMENT, AND WINDOW SYSTEMS AS DEFINED IN THE ARCHITECTURAL PLANS.

9.0 SPECIAL INSPECTIONS

9.01 PER THE REQUIREMENTS OF CHAPTER 17, SECTION 1704.1 OF THE REFERENCED BUILDING CODE, SPECIAL INSPECTION IS REQUIRED FOR THE PROPOSED BUILDING CONSTRUCTION. SPECIAL INSPECTION INVOLVES THE VERIFICATION OF COMPLIANCE OF MATERIALS, INSTALLATION, FABRICATION, ERECTION AND OR PLACEMENT OF COMPONENTS WITH THE OFFICIAL SET OF CONSTRUCTION DOCUMENTS AND REFERENCED STANDARDS. SPECIAL INSPECTION IS PART OF THE PERMIT APPLICATION PROCESS FUNDED BY THE OWNER OR OWNER'S AGENT.

9.02 A STATEMENT OF SPECIAL INSPECTION LISTING THE REQUIREMENTS ALONG WITH A SCHEDULE OF TESTING, SUBMITTAL REVIEWS, AND FIELD OBSERVATION REQUIREMENTS HAS BEEN PREPARED AND DISPLAYED ON THIS DRAWING SET. THIS STATEMENT INCLUDES A COMPLETE LIST OF MATERIAL AND ACTIVITY REQUIRING INSPECITON. IT IS THE RESPONSIBILITY OF ALL PARTIES TO BECOME FAMILIAR WITH THIS REQUIREMENT AND UNDERSTAND THE GUIDELINES AND REQUIREMENTS OF EACH PARTY INVOLVED WITH THE CONSTRUCTION. THE SPECIAL INSPECTOR COORDINATOR SHALL COORDINATE WITH THE OWNER, CONTRACTOR, AND THE DESIGN PROFESSIONALS AND SCHEDULE THE INSPECTIONS ACCORDINGLY.

10.0 SAFE ROOM

10.01 SAFE ROOM WALLS TO BE FULLY CONSTRUCTED AND INSPECTED PRIOR TO COMMENCING CONSTRUCTION ON EXTERIOR WALLS.

10.02 EXTERIOR AND INTERIOR SIDES OF SAFE ROOM WALLS MUST HAVE TOOLED JOINTS.

10.03 MECHANICAL AND ELECTRICAL PENETRATIONS SHOULD BE KEPT TO A MINIMUM. ANY OPENINGS LARGER THAN 3 1/2" SQUARE OR 2" IN DIAMETER SHALL BE PROTECTED BY BAFFLES, COWLINGS, OR OTHER MEANS. THESE COVERINGS SHOULD MEET PRESSURE TESTING AND IMPACT CRITERIA AS SPECIFICED IN THESE PLANS. SEE ARCHITECTURAL DRAWINGS FOR VENTILATION REQUIREMENTS.

10.04 THE SELECTED SAFE ROOM DOOR SHALL MEET THE DESIGN CRITERIA OF 2015 FEMA P-361 AND 2014 ICC-500. DOOR SHALL BE A TESTED ASSEMBLY AND INSTALLED PER MANUFACTURER'S RECOMMENDATIONS.

10.05 IF AN IMPACT RESISTANT GLAZING IS SELECTED FOR THE SAFE ROOM WINDOW(S) THE SELECTED WINDOW(S) SHALL MEET THE DESIGN CRITERIA OF 2015 FEMA P-361 AND 2014 ICC-500. WINDOW SHALL BE A TESTED ASSEMBLY AND INSTALLED PER MANUFACTURER'S RECOMMENDATIONS.

10.06 IF A WINDOW PROTECTION ASSEMBLY IS SELECTED FOR THE SAFE ROOM, IT SHALL MEET THE DESIGN CRITERIA OF 2015 FEMA P-361 AND 2014 ICC-500. WINDOW PROTECTION ASSEMBLY SHALL BE A TESTED ASSEMBLY AND INSTALLED PER MANUFACTURER'S RECOMMENDATIONS.

COMMON ABBREVIATIONS

ARCH.	ARCHITECT	IN.	INCHES
B/	BOTTOM OF	INFO.	INFORMATION
BRG.	BEARING	INT.	INTERIOR
BOTT.	BOTTOM	JNT.	JOINT
C/C	CENTER-TO-CENTER	K	KIPS
CIP.	CAST IN PLACE	KSI	KIPS PER SQUARE INCH
C.J.	CONTROL JOINT	LAT.	LATERAL
CLR.	CLEAR	LBS.	POUNDS
COL.	COLUMN	LLH	LONG LEG HORIZONTAL
CONC.	CONCRETE	LLV	LONG LEG VERTICAL
CONN.	CONNECTION	L.W.	LONG WAYS
CONT.	CONTINUOUS	MANUF.	MANUFACTURER
COORD.	COORDINATE	MAX.	MAXIMUM
CMU	CONCRETE MASONRY UNIT	MECH.	MECHANICAL
DEMO	DEMOLISH	MIN.	MINIMUM
DIM.	DIMENSION	N.T.S.	NOT TO SCALE
DTL.	DETAIL	NO.	NUMBER (BAR)
DIA.	DIAMETER	O.C.	ON CENTER
DIST.	DISTANCE	OPNG.	OPENING
DWGS.	DRAWINGS	PL.	PLATE
EA.	EACH	PREFAB.	PREFABRICATED
EL.	ELEVATION	PROJ.	PROJECTION
E.F.	EACH FACE	PSF	POUNDS PER SQUARE FOOT
EMBED.	EMBEDMENT	PSI	POUNDS PER SQUARE INCH
ENG.	ENGINEER	P.T.	PRESSURE TREATED
E.O.R.	ENGINEER OF RECORD	QTY	QUANTITY
EQ.	EQUAL	REF.	REFERENCE
EQUIP.	EQUIPMENT	REINF.	REINFORCED OR REINFORCING
E.S.	EACH SIDE	SCH.	SCHEDULE
E.W.	EACH WAY	S.F.	STEPPED FOOTING
EXP.	EXPANSION	SPA.	SPACING
EXT.	EXTERIOR	SIM.	SIMILAR
FABR.	FABRICATOR	SQU.	SQUARE
F.F.	FINISHED FLOOR	SQ. FT.	SQUARE FEET
FFE	FINISHED FLOOR ELEVATION	STL.	STEEL
FT.	FEET	STRUC.	STRUCTURAL
FDN.	FOUNDATION	S.W.	SHORT WAYS
GA.	GAUGE	SYP	SOUTHERN YELLOW PINE
GALV.	GALVANIZED	T/	TOP OF
HGT.	HEIGHT	TDD.	TRUSS DESIGN DRAWINGS
HKD.	HOOKED	TYP.	TYPICAL
HORIZ.	HORIZONTAL	U.N.O.	UNLESS NOTED OTHERWISE
HR.	HOUR	VERT.	VERTICAL
H.S.	HEADED STUD	VCJ	VERTICAL CONTROL JOINT
		VMCJ	VERTICAL MASONRY CONTROL JOINT
		W/	WITH
		W/0	WITHOUT
		WWF	WELDED WIRE FABRIC

NOTE: ABBREVIATIONS MAY BE SHOWN WITH OR WITHOUT PERIODS (IE, TYP OR TYP. FOR TYPICAL)

DESIGN CRITERIA FOR PRIMARY STRUCTURE AND MODULES

DESIGN CRITERIA – CODES AND SPECIFICATIONS

1. 2018 PUERTO RICO BUILDING CODE.
2. ACI 318-14-BUILDING CODE REQUIREMENTS FOR STRUCTURAL CONCRETE.
3. ACI 301-10–SPECIFICATIONS FOR STRUCTURAL CONCRETE FOR BUILDINGS.
4. ASCE/SEI 7-16–MINIMUM DESIGN LOADS FOR BUILDINGS AND OTHER STRUCTURES.
5. TMS 402/602-16 BUILDING CODE REQUIREMENTS AND SPECIFICATIONS FOR MASONRY STRUCTURES.
6. NDS 2018-NATIONAL DESIGN ASSOCIATION SPECIFICATION FOR WOOD CONSTRUCTION.
7. ANSI/TP1 1-2014-NATIONAL DESIGN STANDARD FOR METAL-PLATE CONNECTED WOOD TRUSS CONSTRUCTION.

DESIGN LOADS

DEAD LOAD

THE WEIGHT OF ALL PERMANENT CONSTRUCTION INCLUDING BUT NOT LIMITED TO: WALLS, FLOORS, CEILINGS, ROOF CLADDING.

ROOF . . . . . SELF WEIGHT

LIVE LOAD

ROOF . . . . . 20 PSF
FIRST FLOOR . . . . . 40 PSF

WIND LOAD

BASIC WIND SPEED (ULTIMATE) . . . . . 190 MPH IF EXPOSURE D
BASIC WIND SPEED (NOMINAL) . . . . . 147 MPH IF EXPSOURE D
BASIC WIND SPEED (ULTIMATE) . . . . . 210 MPH IF EXPOSURE C
BASIC WIND SPEED (NOMINAL) . . . . . 163 MPH IF EXPSOURE C
BASIC WIND SPEED (ULTIMATE) . . . . . 255 MPH IF EXPOSURE B
BASIC WIND SPEED (NOMINAL) . . . . . 194 MPH IF EXPSOURE B
ULTIMATE BASIC DESIGN WIND SPEEDS CORRESPOND TO PUERTO RICO SPECIAL WIND HAZARD MAP ADOPTED IN THE 2018 PUERTO RICO BUILDING CODE

RISK CATEGORY II

ENCLOSURE CLASSIFICATION . . . . . PARTIALLY OPEN
INTERNAL PRESSURE COEFFICIENTS . . . . . +/- 0.18

SEISMIC LOAD

SEISMIC IMPORTANCE FACTOR 1.0
Ss 1.35
S1 . . . . . 0.53
SITE CLASS . . . . . D (STIFF SOIL)
Sds 0.90
Sd1 . . . . . 0.36
SEISMIC DESIGN CATEGORY . . . . . D

SEISMIC FORCE RESISTING SYSTEM

BEARING WALL SYSTEM (PRIMARY STRUCTURE 1ST STORY):
LIGHT-FRAME (WOOD) WALLS SHEATHED WITH WOOD STRUCTURAL PANELS RATED FOR SHEAR RESISTANCE
ANALYSIS METHOD . . . . . EQUIVALENT LATERAL FORCE
R 6.5
Cs 0.14
DESIGN BASE SHEAR . . . . . 4.72 KIPS
OVERSTRENGTH FACTOR 3

BEARING WALL SYSTEM (MODULE STRUCTURES):
LIGHT-FRAME (WOOD) WALLS SHEATHED WITH WOOD STRUCTURAL PANELS RATED FOR SHEAR RESISTANCE
ANALYSIS METHOD . . . . . EQUIVALENT LATERAL FORCE
R 6.5
Cs 0.14
DESIGN BASE SHEAR . . . . . 2.3 KIPS
OVERSTRENGTH FACTOR 3

DESIGN CRITERIA FOR SAFE ROOM

DESIGN CRITERIA – SAFE ROOM

1. 2018 INTERNATIONAL RESIDENTIAL CODE
2. 2018 INTERNATIONAL BUILDING CODE
3. FEMA P-361 THIRD EDITION
4. ICC 500-2014

DESIGN LOADS

DEAD LOAD

THE WEIGHT OF ALL PERMANENT CONSTRUCTION INCLUDING BUT NOT LIMITED TO: WALLS, FLOORS, CEILINGS, ROOF CLADDING.

ROOF . . . . . SELF WEIGHT
COLLATERAL LOAD . . . . . 5 PSF

LIVE LOAD

ROOF . . . . . 150 PSF

WIND LOAD

BASIC WIND SPEED (ULTIMATE) . . . . . 250 MPH
BASIC WIND SPEED (NOMINAL) . . . . . 194 MPH
RISK CATEGORY II
EXPOSURE CATEGORY . . . . . D
ENCLOSURE CLASSIFICATION . . . . . PARTIALLY ENCLOSED
INTERNAL PRESSURE COEFFICIENTS . . . . . +/- 0.55

SEISMIC LOAD

SEISMIC IMPORTANCE FACTOR 1.0
Ss 1.35
S1 . . . . . 0.53
SITE CLASS . . . . . D (STIFF SOIL)
Sds 0.9
Sd1 . . . . . 0.36
SEISMIC DESIGN CATEGORY . . . . . D

SEISMIC FORCE RESISTING SYSTEM

BEARING WALL SYSTEM:
SPECIAL REINFORCED MASONRY SHEAR WALL
R 5
Cs 0.181
DESIGN BASE SHEAR . . . . . 9.48 KIPS
OVERSTRENGTH FACTOR 2 1/2

FLOOD CRITERIA

A. THE SAFE ROOM SHALL BE LOCATED OUTSIDE OF THE FOLLOWING HIGH-RISK FLOOD HAZARD AREAS:

1. FLOOD HAZARD AREAS SUBJECT TO HIGH VELOCITY WAVE ACTION (V ZONES) AND COASTAL A ZONES.
2. FLOODWAYS
3. ANY AREAS SUBJECT TO STORM SURGE INUNDATION ASSOCIATED WITH ANY MODELED HURRICANE CATEGORY, INCLUDING COASTAL WAVE EFFECTS.

B. THE LOWEST FLOOR USED FOR THE OCCUPIED RESIDENTIAL SAFE ROOM SHALL BE ELEVATED TO THE HIGHER OF THE ELEVATIONS DETERMINED BY:

1. THE FLOOD ELEVATION, INCLUDING COASTAL WAVE EFFECTS, HAVING A 0.2 PERCENT ANNUAL CHANCE OF BEING EQUALED OR EXCEEDED IN ANY GIVEN YEAR; OR
2. THE FLOOD ELEVATION CORRESPONDING TO THE HIGHEST RECORDED FLOOD ELEVATION IF A FLOOD HAZARD STUDY HAS NOT BEEN CONDUCTED FOR THE AREA; OR
3. THE MINIMUM ELEVATION OF THE LOWEST FLOOR REQUIRED BY THE AUTHORITY HAVING JURISDICTION FOR THE LOCATION WHERE THE SAFE ROOM IS INSTALLED.
4. THE FLOOD ELEVATION HAVING A 1 PERCENT ANNUAL CHANCE OF BEING EQUALED OR EXCEEDED IN ANY GIVEN YEAR.

SAFE ROOM DOOR, WINDOW AND/OR AND WINDOW PROTECTION ASSEMBLY

A. MISSILE IMPACT CRITERIA

1. VERTICAL SURFACES . . . . . 15 POUND 2 x 4 AT 100 MPH
2. HORIZONTAL SURFACES . . . . . 15 POUND 2 x 4 AT 67 MPH

STATEMENT OF SPECIAL INSPECTIONS

SPECIAL INSPECTION TYPE	CONTINUOUS	PERIODIC
1. *CONCRETE VERIFICATION/INSPECTION*		
a. Inspect reinforcement and verify placement		X
b. Inspect anchors cast in concrete		X
c. Inspect anchors post installed in concrete	X	
d. Verify use of required design mix		X
e. Prior to concrete placement, fabricate specimens for strength tests, perform slump and air content tests, and determine the temperature of the concrete	X	
f. Inspect concrete for proper application techniques	X	
g. Verify in-situ concrete strength prior to removal of forms		X
h. Inspect formwork for shape, location, and dimensions of the concrete member being formed		X
2. *SOILS VERIFICATION/INSPECTION*		
a. Verify materals below shallow foundations are adequate to achieve the design-bearing capacity		X
b. Verify excavations are extended to proper depth and have reached proper material		X
c. Perform classification and testing of compacted fill materials		X
d. Verify use of proper materials, densities and lift thicknesses during placement and compaction of compacted fill	X	
e. Prior to placement of compacted fill, observe subgrade and verify that site has been prepared properly		X
3. *STRUCTURAL WOOD*		
a. Verify nailing, bolting, anchoring, and other fastening elements		X
4. *MASONRY*		
a. Prior to construction verify proportions of site prepared mortar		X
b. Prior to construction verify grade, type, and size of reinforcement, anchor bolts, and connectors		X
c. Prior to grouting verify grout spacing, and locations of anchors, reinforcement, and connectors		X
d. During construction verify compliance with the approved submittals		X
e. During construction verify location of structural members including: anchors, reinforcement, and other connectors		X
f. Verify preparation of masonry during cold or hot weather		X
g. Observe preparation of grout specimens, mortar specimen, and/or prisms		X

ALL CONSTRUCTION MUST COMPLY WITH THE PUERTO RICO BUILDING CODE. YOU ARE REQUIRED TO OBTAIN THE NECESSARY BUILDING PERMITS FROM THE DEPARTMENT OF PLANNING AND RESOURCES. SIGNED AND SEALED DRAWINGS FOR PERMIT MUST BE SUBMITTED TO THE DEPARTMENT OF ECONOMIC DEVELOPMENT AND COMMERCE (DDEC), PERMITS MANAGEMENT OFFICE.

STRUCTURES LOCATED IN SPECIAL FLOOD HAZARD AREAS SHALL BE DESIGNED BY A REGISTERED DESIGN PROFESSIONAL AND CERTIFIED TO COMPY WITH ASCE 24-14 FLOOD RESISTANT DESIGN AND CONSTRUCTION.

NOT FOR CONSTRUCTION

CONSULTANT:

CLIENT:

PROJECT NAME:

ONE STORY WOOD HOME

NOTE: PRIOR TO CONSTRUCTION CONTACT PUERTO RICO DEPARTMENT OF ECONOMIC DEVELOPMENT AND COMMERCE (DDEC), PERMITS MANAGEMENT OFFICE (OGPe-DDEC) FOR BUILDING REQUIREMENTS IN PUERTO RICO. THIS INFORMATION HAS BEEN DEVELOPED FOR THE USE OF PUERTO RICO RESIDENTS AND IS BELIEVED TO MEET THE PUERTO RICO BUILDING CODE. ALL DRAWINGS MUST BE SEPARATELY APPROVED BY DDEC, PERMITS MANAGEMENT OFFICE UPON SUBMISSION OF A BUILDING PERMIT APPLICATION.

ISSUE LOG

No.	Date	Description

PROFESSIONAL SEALS:

SHEET TITLE:

General Notes

SHEET INFORMATION:

JOB No.	Date Issued: 5/15/2020
Drawn By:	Sheet Number:
Checked By:	**S-002B**
QC Review:	
Phase:	

COMPONENTS AND CLADDING
ULTIMATE DESIGN PRESSURE SCHEDULE

GABLE ROOF 7° < ⊖ ≤ 20° WALLS h ≤ 60 FT			EXPOSURE CATEGORY, TOPOGRAPHIC FACTOR EXP. D, Kzt = 1.0	
			SURFACE PRESSURE (PSF)	
COMPONENT	ZONE	EFFECTIVE WIND AREA (SF)	POSITIVE	NEGATIVE
ROOF ELEMENTS	1 & 2e	10	55.0	-176.4
		50	46.1	-103.6
		100	38.8	-55.0
	2n, 2r, & 3e	10	55.0	-257.3
		50	46.1	-176.4
		100	38.8	-144.0
	3r	10	55.0	-305.8
		50	46.1	-208.7
		100	38.8	-160.2
	Ovh. 1 & 2e	10	N/A	-216.8
		50	N/A	-191.8
		100	N/A	-168.3
	Ovh. 2n	10	N/A	-297.7
		50	N/A	-216.8
		100	N/A	-176.4
	Ovh. 3e	10	N/A	-346.3
		50	N/A	-241.1
		100	N/A	-200.7
	Ovh. 3r	10	N/A	-394.8
		50	N/A	-257.3
		100	N/A	-200.7
EXTERIOR WALL ELEMENTS	4	10	95.5	-103.6
		50	87.4	-95.5
		100	79.3	-87.4
	5	10	95.5	-127.8
		50	87.4	-110.0
		100	79.3	-103.6

NOTES:
1. DESIGN WIND PRESSURES SHALL BE USED IN THE DESIGN OF ALL COMPONENTS AND CLADDING ELEMENTS COMPRISING THE BUILDING ENVELOPE.
2. REFER TO THE WIND PRESSURE DIAGRAM FOR ZONE LOCATIONS AND EXTENTS.
3. POSITIVE PRESSURES ACT TOWARD COMPONENT SURFACES AND NEGATIVE PRESSURES ACT AWAY FROM COMPONENT SURFACES.
4. LINEAR INTERPOLATION BETWEEN EFFECTIVE WIND AREAS MAY BE USED TO OBTAIN THE REQUIRED COMPONENT AND CLADDING DESIGN PRESSURE.
5. OVERHANG SOFFIT PRESSURE EQUALS ADJACENT WALL PRESSURE.

1 ROOF & WALL DIAGRAM-C & C PRESSURES WITHOUT MODULES

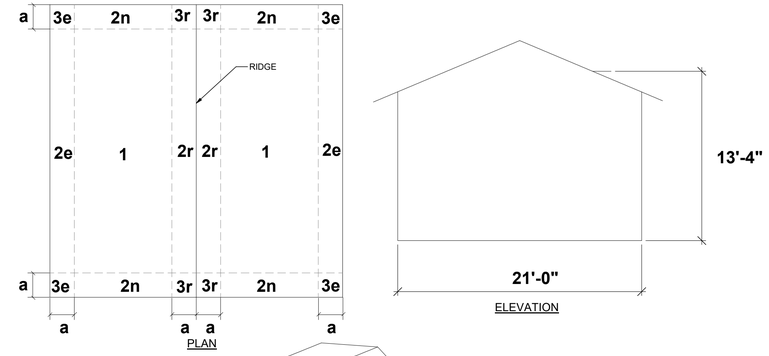

PLAN

ELEVATION

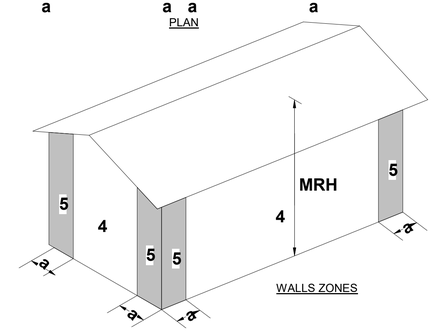

WALLS ZONES

WIND PRESSURE DIAGRAMS

REFER TO "COMPONENTS AND CLADDING" TABLE FOR ULTIMATE DESIGN PRESSURES

a = 10% of least horizontal dimension or 0.4h, whichever is smaller, but not less that either 4% of least horizontal dimension or 3ft (0.9m). If an overhang exists, the edge distance shall be measured from the outside edge of the overhang. The horizontal dimensions used to compute the edge distance shall not include any overhang distances.

MRH=MEAN ROOF HEIGHT

h = Mean roof heigth, in ft (m), except that eave heigth shall be used for ⊖ >=10°

B = Horizontal dimension of the building measured normal to wind direction, in ft(m)

COMPONENTS AND CLADDING
ULTIMATE DESIGN PRESSURE SCHEDULE

GABLE ROOF 7° < ⊖ ≤ 20° WALLS h ≤ 60 FT			EXPOSURE CATEGORY, TOPOGRAPHIC FACTOR EXP. D, Kzt = 1.0	
			SURFACE PRESSURE (PSF)	
COMPONENT	ZONE	EFFECTIVE WIND AREA (SF)	POSITIVE	NEGATIVE
ROOF ELEMENTS	1 & 2e	10	55.0	-176.4
		50	46.1	-103.6
		100	38.8	-55.0
	2n, 2r, & 3e	10	55.0	-257.3
		50	46.1	-176.4
		100	38.8	-144.0
	3r	10	55.0	-305.8
		50	46.1	-208.7
		100	38.8	-160.2
	Ovh. 1 & 2e	10	N/A	-216.8
		50	N/A	-191.8
		100	N/A	-168.3
	Ovh. 2n	10	N/A	-297.7
		50	N/A	-216.8
		100	N/A	-176.4
	Ovh. 3e	10	N/A	-346.3
		50	N/A	-241.1
		100	N/A	-200.7
	Ovh. 3r	10	N/A	-394.8
		50	N/A	-257.3
		100	N/A	-200.7
EXTERIOR WALL ELEMENTS	4	10	95.5	-103.6
		50	87.4	-95.5
		100	79.3	-87.4
	5	10	95.5	-127.8
		50	87.4	-110.0
		100	79.3	-103.6

NOTES:
1. DESIGN WIND PRESSURES SHALL BE USED IN THE DESIGN OF ALL COMPONENTS AND CLADDING ELEMENTS COMPRISING THE BUILDING ENVELOPE.
2. REFER TO THE WIND PRESSURE DIAGRAM FOR ZONE LOCATIONS AND EXTENTS.
3. POSITIVE PRESSURES ACT TOWARD COMPONENT SURFACES AND NEGATIVE PRESSURES ACT AWAY FROM COMPONENT SURFACES.
4. LINEAR INTERPOLATION BETWEEN EFFECTIVE WIND AREAS MAY BE USED TO OBTAIN THE REQUIRED COMPONENT AND CLADDING DESIGN PRESSURE.
5. OVERHANG SOFFIT PRESSURE EQUALS ADJACENT WALL PRESSURE.

2 ROOF & WALL DIAGRAM-C & C PRESSURES WITH MODULE ADDITION

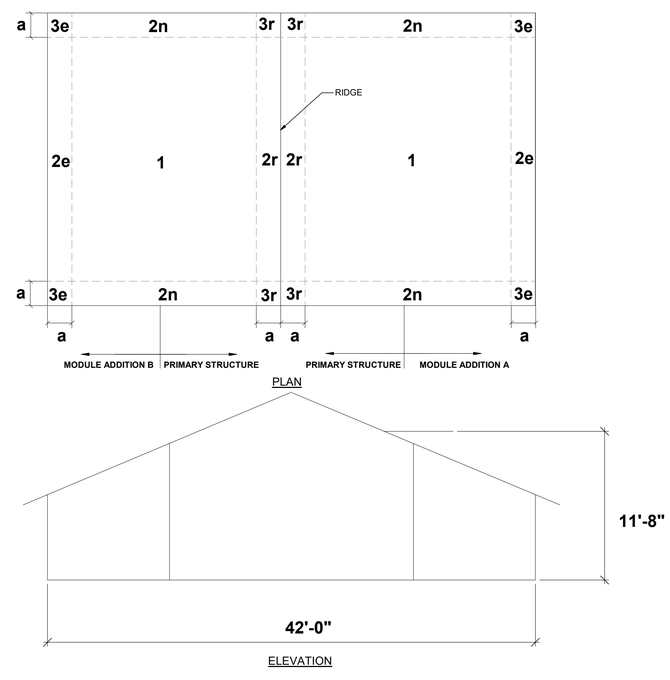

PLAN

ELEVATION

NOT FOR CONSTRUCTION

CONSULTANT:

CLIENT:

PROJECT NAME:

ONE STORY WOOD HOME

NOTE: PRIOR TO CONSTRUCTION CONTACT PUERTO RICO DEPARTMENT OF ECONOMIC DEVELOPMENT AND COMMERCE (DDEC), PERMITS MANAGEMENT OFFICE (OGPe-DDEC) FOR BUILDING REQUIREMENTS IN PUERTO RICO. THIS INFORMATION HAS BEEN DEVELOPED FOR THE USE OF PUERTO RICO RESIDENTS AND IS BELIEVED TO MEET THE PUERTO RICO BUILDING CODE. ALL DRAWINGS MUST BE SEPARATELY APPROVED BY DDEC, PERMITS MANAGEMENT OFFICE UPON SUBMISSION OF A BUILDING PERMIT APPLICATION.

ISSUE LOG

No.	Date	Description

PROFESSIONAL SEALS:

SHEET TITLE:

Design Data

SHEET INFORMATION:

JOB No.	Date Issued: 5/15/2020
Drawn By:	Sheet Number:
Checked By:	**S-003**
QC Review:	
Phase:	

WOOD FASTENING SCHEDULE			
ITEM	DESCRIPTION OF BUILDING ELEMENTS	NUMBER AND TYPE OF FASTENER	SPACING AND LOCATION
		Roof	
1	Rafter or roof truss to top plate	Use Connector See Plans	See Plans
2	Blocking to top plate	A34 Connector with 8 #9 x 1 1/2" SD Screws	6" o.c.
		Wall	
3	Built-up header ((3) 2x header with (2) 1/2" spacers)	16d common (3 1/2" x 0.162")	16" o.c each edge, face nail, both sides
		16d box (3 1/2" x 0.135")	12" o.c each edge, face nail, both sides
4	Top plate to top plate	10d box (3" x 0.128")	6" o.c face nail
5	Double top plate splice	See Plans	See Plans
6	Top plate or bottom plate to stud	Use Connector See Plans	See Plans
7	Top plate, laps at corners	3-10d box (3" x 0.128"); or 2-16d common (3 1/2" x 0.162")	Face nail
8	King Stud to King Stud at Openings	See Plans	See Plans
9	Blocking to Stud	6-10d box (3" x 0.128")	Toe Nail (3) Ea. End
10	Sill Plate to Sill Plate	10d box (3" x 0.128")	6" o.c. face nail

NOTE: THIS FASTENING SCHEDULE SHALL APPLY TO ALL MEMBERS UNLESS SPECIFIED IN PLANS. WHERE PLANS CALL OUT MORE STRINGENT REQUIREMENTS FOLLOW PLANS.

1 WOOD FASTENING SCHEDULE

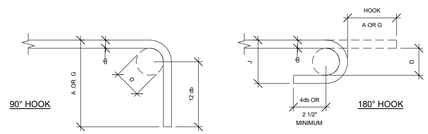

END HOOK DIMENSIONS				
BAR SIZE	FINISHED BEND DIAMETER D, (INCHES)	180° HOOKS		90° HOOK
		A OR G, (INCHES)	J, (INCHES)	A OR G, (INCHES)
#3	2 1/4	5	3	6
#4	3	6	4	8
#5	3 3/4	7	5	10
#6	4 1/2	8	6	12

D = INSIDE DIAMETER OF BEND
db = DIAMETER OF BAR

2 TYPICAL END HOOK TYPES

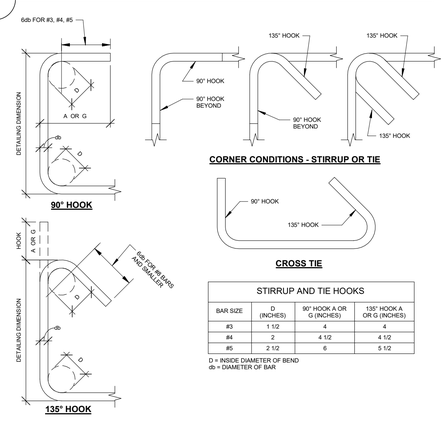

STIRRUP AND TIE HOOKS			
BAR SIZE	D (INCHES)	90° HOOK A OR G (INCHES)	135° HOOK A OR G (INCHES)
#3	1 1/2	4	4
#4	2	4 1/2	4 1/2
#5	2 1/2	6	5 1/2

D = INSIDE DIAMETER OF BEND
db = DIAMETER OF BAR

3 TYPICAL STIRRUP AND TIE HOOK TYPES

HEADERED WALL OPENING SCHEDULE					
OPENING WIDTH	BEAM SIZE	KING & JACK STUD (EA. SIDE)	SILL PLATE	LOCATION	HEADER STRAPS (EA. SIDE)
3'-0"	(3) 2"x8"	2 & 2	(1) 2"x6"	2ND. FLOOR	MSTA 30
6'-0"	(3) 2"x8"	3 & 3	(2) 2"x6"	2ND. FLOOR	MSTA 30

NOTES:
1. PROVIDE TSP STUD PLATE TIES AT EACH KING/JACK, REF. TYP. WALL OPENING DETAILS.
2. PROVIDE MSTA 30 STRAPS EACH SIDE OF BEARING HEADERED OPENINGS, REF. TYPICAL WALL OPENING DETAILS.

4 HEADERED WALL OPENING SCHEDULE

LAP SPLICE SCHEDULE CONCRETE		
BAR SIZE	f'c = 3000 psi	
	TENSION	COMPRESSION
3	21	8
4	28	11
5	36	14
6	43	16
7	62	19
8	71	22
9	80	25

NOTES:
1. LAP LENGTHS ARE IN INCHES AND ARE BASED ON GRADE 60 REINFORCING STEEL AND NORMAL WEIGHT CONCRETE.

5 LAP SPLICE SCHEDULE CONCRETE

LAP SPLICE SCHEDULE MASONRY		
BAR SIZE	f'M = 1900 psi	
	TENSION	COMPRESSION
3	27	27
4	36	36
5	45	45
6	54	54
7	63	63
8	72	72
9	82	82

NOTES:
1. LAP LENGTHS ARE IN INCHES AND ARE BASED ON GRADE 60 REINFORCING STEEL AND NORMAL WEIGHT MASONRY UNITS.

6 LAP SPLICE SCHEDULE MASONRY

STRUCTURAL SHEATHING SCHEDULE					
ELEMENT	SHEATHING	FASTENER	SPAN RATING	PANEL FASTENING	
				EDGE	INTERIOR
EXTERIOR WALL	23/32" STRUCT. 1 PANELS	#12 SCREW W/ 3" LENGTH	48/24	3" C/C	6" C/C
ROOF	23/32" STRUCT. 1 PANELS	#12 SCREW W/ 3" LENGTH	48/24	3" C/C	6" C/C

NOTES:
1. FOR ALL WALL SHEATHING PROVIDE CONTINUOUS BLOCKING AT ALL PANEL EDGES PERPENDICULAR TO THE FRAMING MEMBERS. APPLY SHEATHING PERPENDICULAR TO FRAMING MEMBERS. PROVIDE DOUBLE WALL STUDS TO SUPPORT EXTERIOR SHEATHING AT SHEATHING JOINTS.
2. WHERE FASTENER ATTACHES TO BLOCKING PROVIDE 3/4" EDGE DISTANCE FROM PANEL EDGE TO CENTER LINE OF FASTENER.

7 STRUCTURAL SHEATHING SCHEDULE

WALL STUD SCHEDULE				
EXTERIOR LOAD BEARING				
STUD SIZE	SPECIES/GRADE	UNBRACED HGT.	LOCATION	SPACING
2"x6"	S-Y-P No.2	8'-0"	2nd FLOOR	12" C/C
INTERIOR NON-LOAD BEARING				
2"x4"	S-Y-P No.2	8'-0"	2nd FLOOR	16" C/C

NOTES:
1. SEE TYPICAL DETAILS FOR REQUIRED CONNECTORS
2. PROVIDE ATTACHMENT OF INTERIOR NON LOAD BEARING WALLS TO WOODEN ROOF TRUSSES UTILIZING VERTICALLY SLOTTED CONNECTION.

8 WALL STUD SCHEDULE

NOT FOR CONSTRUCTION

CONSULTANT:

CLIENT:

PROJECT NAME:

ONE STORY WOOD HOME

NOTE: PRIOR TO CONSTRUCTION CONTACT PUERTO RICO DEPARTMENT OF ECONOMIC DEVELOPMENT AND COMMERCE (DDEC), PERMITS MANAGEMENT OFFICE (OGPe-DDEC) FOR BUILDING REQUIREMENTS IN PUERTO RICO. THIS INFORMATION HAS BEEN DEVELOPED FOR THE USE OF PUERTO RICO RESIDENTS AND IS BELIEVED TO MEET THE PUERTO RICO BUILDING CODE. ALL DRAWINGS MUST BE SEPARATELY APPROVED BY DDEC, PERMITS MANAGEMENT OFFICE UPON SUBMISSION OF A BUILDING PERMIT APPLICATION.

ISSUE LOG

No.	Date	Description

PROFESSIONAL SEALS:

SHEET TITLE:

Schedules and Hook Types

SHEET INFORMATION:

JOB No.	Date Issued: 5/15/2020
Drawn By:	Sheet Number:
Checked By:	**S-004**
QC Review:	
Phase:	

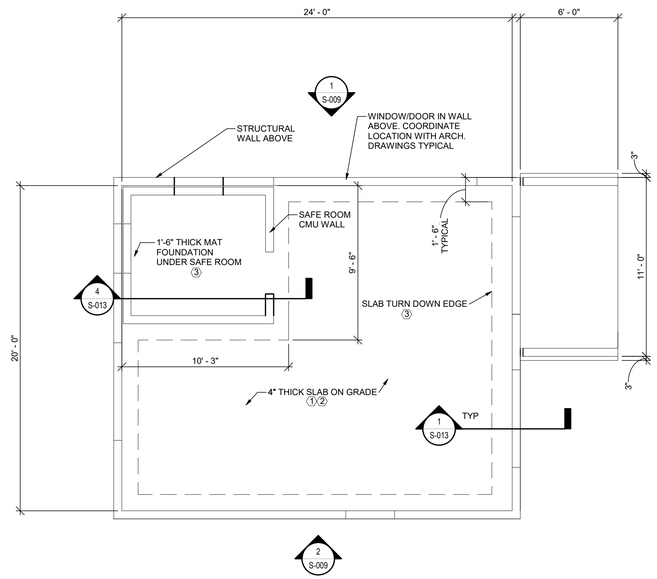

MAIN RESIDENCE

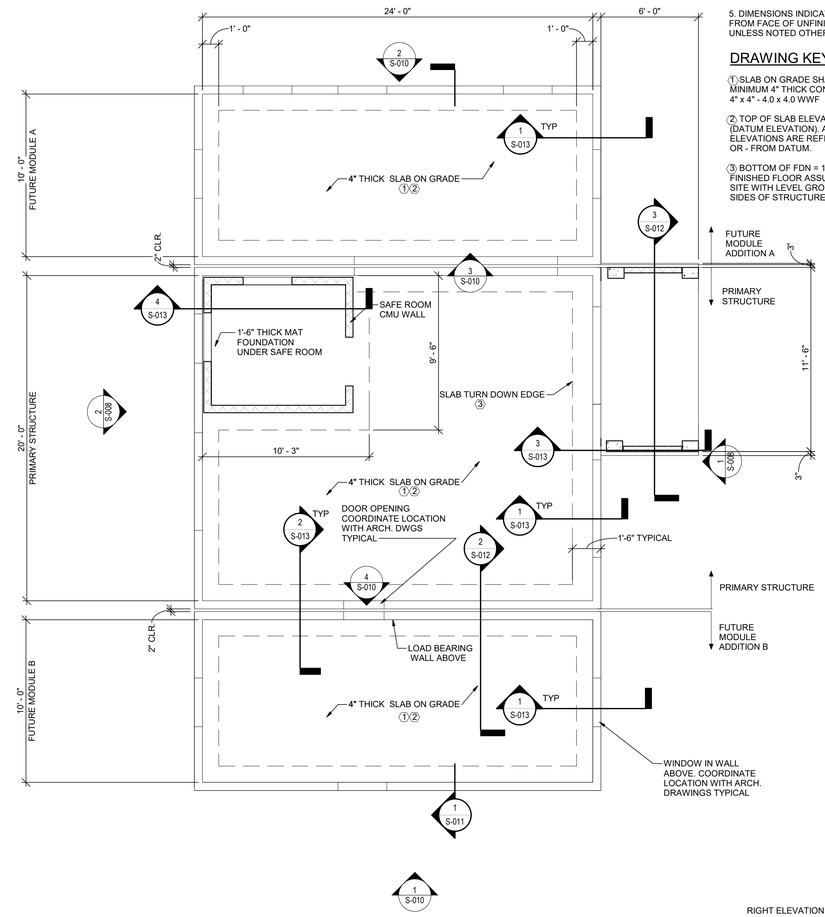

MAIN RESIDENCE WITH FUTURE MODULES

1 S-005 FOUNDATION PLANS

1/4" = 1'-0"

STRUCTURAL NOTES:

1. MAIN RESIDENCE (PRIMARY STRUCTURE) TO BE BUILT PRIOR OR SIMULTANEOUSLY WITH BUILDING MODULES. MODULES SHALL NOT BE CONSTRUCTED WITHOUT CONSTRUCTING THE PRIMARY STRUCTURE.

2. SEE SECTIONS FOR CONCRETE STEEL REINFORCING.

3. COORDINATE DOOR/WINDOW OPENINGS WITH ARCH. DWGS.

4. COORDINATE WITH OTHER DISCIPLINES AND TRADES FOR LOCATIONS AND DIMENSIONS OF OPENINGS, RECESSES, SLEEVES, AND PIPING.

5. DIMENSIONS INDICATED ARE FROM FACE OF UNFINISHED WALL, UNLESS NOTED OTHERWISE.

DRAWING KEY NOTES:

1. SLAB ON GRADE SHALL BE A MINIMUM 4" THICK CONCRETE WITH 4" x 4" - 4.0 x 4.0 WWF

2. TOP OF SLAB ELEVATION IS AT 0'-0" (DATUM ELEVATION). ALL OTHER ELEVATIONS ARE REFERENCED AS + OR - FROM DATUM.

3. BOTTOM OF FDN = 1'-6" BELOW FINISHED FLOOR ASSUMING A FLAT SITE WITH LEVEL GROUND ON ALL SIDES OF STRUCTURE.

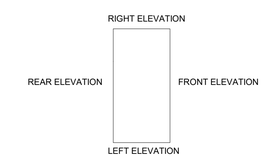

KEY PLAN

SCALE: 1/4" = 1'-0"

ORIGINAL SHEET SIZE-24 x 36
OTHERWISE SCALES ARE INACCURATE

NOT FOR CONSTRUCTION

CONSULTANT:

CLIENT:

PROJECT NAME:

ONE STORY WOOD HOME

NOTE: PRIOR TO CONSTRUCTION CONTACT PUERTO RICO DEPARTMENT OF ECONOMIC DEVELOPMENT AND COMMERCE (DDEC), PERMITS MANAGEMENT OFFICE (OGPe-DDEC) FOR BUILDING REQUIREMENTS IN PUERTO RICO. THIS INFORMATION HAS BEEN DEVELOPED FOR THE USE OF PUERTO RICO RESIDENTS AND IS BELIEVED TO MEET THE PUERTO RICO BUILDING CODE. ALL DRAWINGS MUST BE SEPARATELY APPROVED BY DDEC, PERMITS MANAGEMENT OFFICE UPON SUBMISSION OF A BUILDING PERMIT APPLICATION.

ISSUE LOG

No.	Date	Description

PROFESSIONAL SEALS:

SHEET TITLE:

Foundation Plans

SHEET INFORMATION:

JOB No.	Date Issued: 5/15/2020
Drawn By:	Sheet Number:
Checked By:	**S-005**
QC Review:	
Phase:	

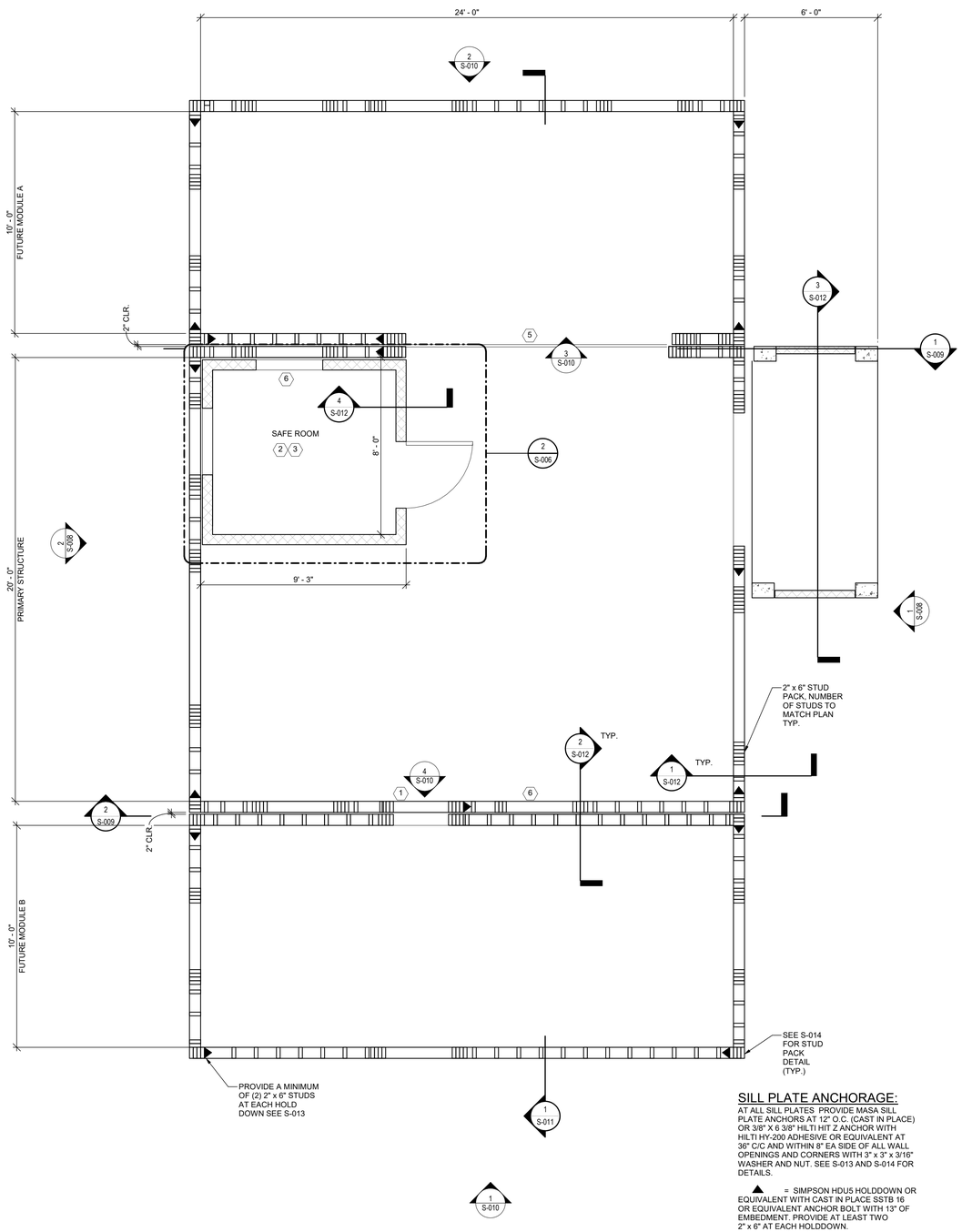

1 S-006 FLOOR PLAN
3/8" = 1'-0"

STRUCTURAL NOTES:

1. MAIN RESIDENCE (PRIMARY STRUCTURE) TO BE BUILT PRIOR OR SIMULTANEOUSLY TO BUILDING MODULES.
2. AT DOOR TO MODULE FROM PRIMARY STRUCTURE SEE FLOOR JOINT DETAIL ON S-013.
3. COORDINATE DOOR/WINDOW OPENINGS WITH ARCH. DWGS.
4. ALL SILL PLATES SHALL BE PRESSURE TREATED.

DRAWING KEY NOTES:

1. PROVIDE DOOR AT THIS LOCATION ONLY WHEN BUILDING MODULE. SEE TYPICAL FLOOR JOINT DETAIL ON S-013.
2. PROVIDE 2" CLEAR BETWEEN SAFE ROOM WALLS AND ADJACENT WALLS.
3. PROVIDE DOOR AND WINDOW MEETING SAFE ROOM REQUIREMENTS. SEE GENERAL NOTES.
4. SEE "TYPICAL SAFE ROOM LINTEL" DETAIL ON S-013.
5. SEE TYPICAL FLOOR JOINT DETAIL ON S-013.
6. WINDOW NOT REQUIRED IF MODULE IS CONSTRUCTED AT THE SAME TIME AS PRIMARY RESIDENCE.

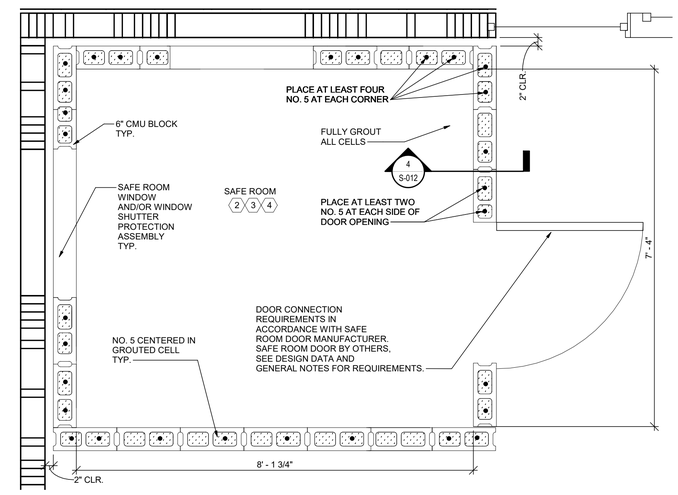

2 S-006 SAFE ROOM PLAN
3/4" = 1'-0"

SILL PLATE ANCHORAGE:

AT ALL SILL PLATES PROVIDE MASA SILL PLATE ANCHORS AT 12" O.C. (CAST IN PLACE) OR 3/8" X 6 3/8" HILTI HIT Z ANCHOR WITH HILTI HY-200 ADHESIVE OR EQUIVALENT AT 36" C/C AND WITHIN 8" EA SIDE OF ALL WALL OPENINGS AND CORNERS WITH 3" x 3" x 3/16" WASHER AND NUT. SEE S-013 AND S-014 FOR DETAILS.

▲ = SIMPSON HDU5 HOLDDOWN OR EQUIVALENT WITH CAST IN PLACE SSTB 16 OR EQUIVALENT ANCHOR BOLT WITH 13" OF EMBEDMENT. PROVIDE AT LEAST TWO 2" x 6" AT EACH HOLDDOWN.

THE REFERENCED CONNECTORS ARE MANUFACTURED BY THE SIMPSON STRONG-TIE COMPANY WITH MITEK-USP ALLOWED AS ACCEPTABLE SUBSTITUTIONS. FEMA/DDEC DOES NOT SPECIFICALLY ENDORSE THE CONNECTORS OF ANY MANUFACTURER. CONNECTORS THAT EQUAL THE SPECIFICATIONS OF THE NOTED CONNECTORS MAY BE SUBSTITUTED.

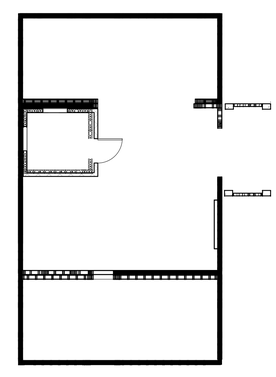

3 S-006 SHEAR WALL KEY PLAN
1/8" = 1'-0"

= SHEAR WALL

0 4' 8' 16'
SCALE: 1/8" = 1'-0"

0 1'-4" 2'-8" 5'-4"
SCALE: 3/8" = 1'-0"

0 0'-8" 1'-4" 2'-8"
SCALE: 3/4" = 1'-0"

0 0'-4" 0'-8" 1'-4"
SCALE: 1 1/2" = 1'-0"

ORIGINAL SHEET SIZE-24 x 36
OTHERWISE SCALES ARE INACCURATE

NOT FOR CONSTRUCTION

CONSULTANT:

CLIENT:

PROJECT NAME:

ONE STORY WOOD HOME

NOTE: PRIOR TO CONSTRUCTION CONTACT PUERTO RICO DEPARTMENT OF ECONOMIC DEVELOPMENT AND COMMERCE (DDEC), PERMITS MANAGEMENT OFFICE (OGPe-DDEC) FOR BUILDING REQUIREMENTS IN PUERTO RICO. THIS INFORMATION HAS BEEN DEVELOPED FOR THE USE OF PUERTO RICO RESIDENTS AND IS BELIEVED TO MEET THE PUERTO RICO BUILDING CODE. ALL DRAWINGS MUST BE SEPARATELY APPROVED BY DDEC, PERMITS MANAGEMENT OFFICE UPON SUBMISSION OF A BUILDING PERMIT APPLICATION.

ISSUE LOG

No.	Date	Description

PROFESSIONAL SEALS:

SHEET TITLE:

Floor Plan

SHEET INFORMATION:

JOB No.	Date Issued: 5/15/2020
Drawn By:	Sheet Number:
Checked By:	**S-006**
QC Review:	
Phase:	

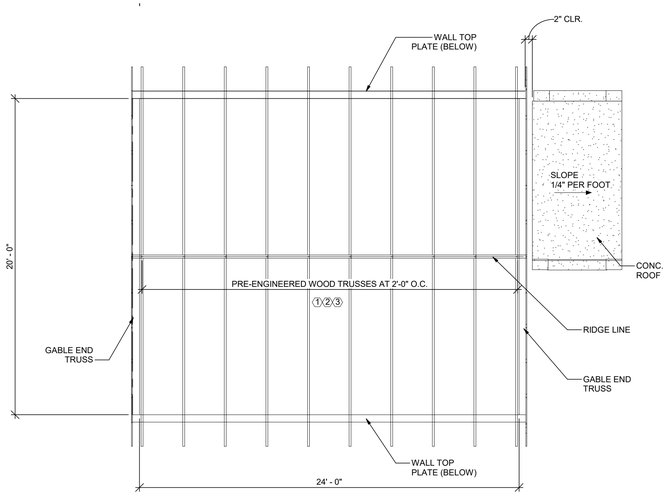

MAIN RESIDENCE

1 S-007 ROOF FRAMING PLANS

1/4" = 1'-0"

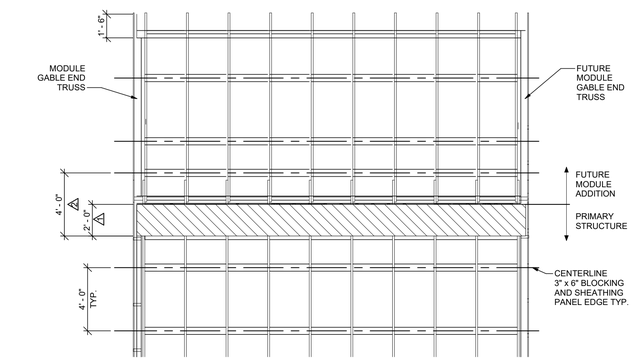

2 S-007 PARTIAL ROOF EXPANSION PLAN

1/4" = 1'-0"

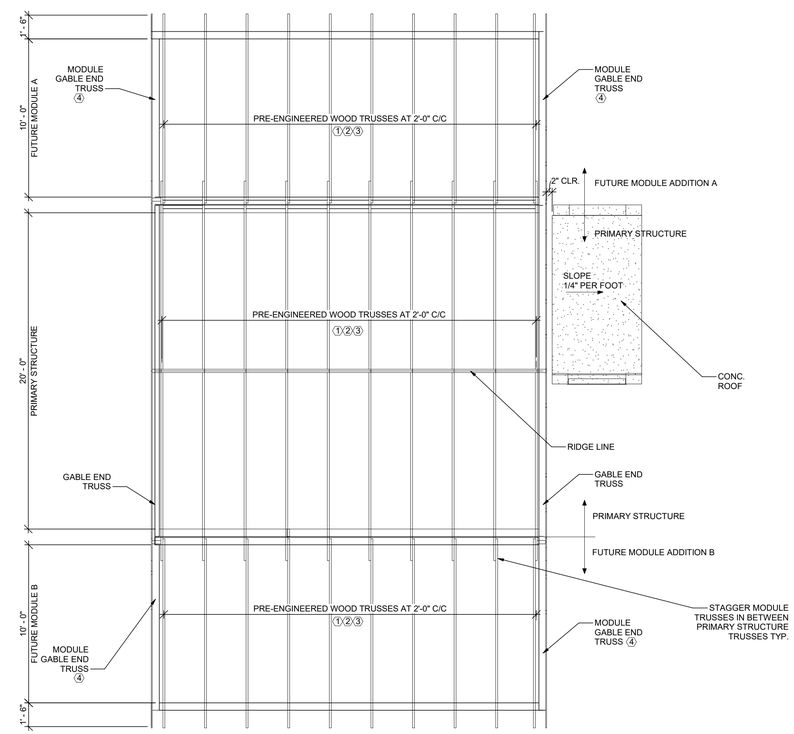

MAIN RESIDENCE WITH FUTURE MODULES

0 2' 4' 8'

SCALE: 1/4" = 1'-0"

ORIGINAL SHEET SIZE-24 x 36
OTHERWISE SCALES ARE INACCURATE

DRAWING KEY NOTES:

① SEE TRUSS TIEDOWN DETAIL AND TRUSS BEARING DETAIL ON S-014.

② PROVIDE 3x FULL HEIGHT BLOCKING AT BEARING WALLS AND ALONG SHEATHING EDGES.

③ TRUSS TOP CHORDS SHALL BE 3x MEMBERS.

④ FIELD SPLICE MODULE GABLE END TRUSS TO PRIMARY STRUCTURE GABLE END TRUSS SEE S-008.

FUTURE MODULE ROOF EXPANSION KEY NOTES:

1 REMOVE TWO FEET OF SHEATHING FROM PRIMARY STRUCTURE ROOF.

2 INSTALL NEW SHEATHING, PER FASTENING SCHEDULES, TO SPAN BOTH PRIMARY AND MODULE ADDITON.

NOT FOR CONSTRUCTION

CONSULTANT:

CLIENT:

PROJECT NAME:

ONE STORY WOOD HOME

NOTE: PRIOR TO CONSTRUCTION CONTACT PUERTO RICO DEPARTMENT OF ECONOMIC DEVELOPMENT AND COMMERCE (DDEC), PERMITS MANAGEMENT OFFICE (OGPe-DDEC) FOR BUILDING REQUIREMENTS IN PUERTO RICO. THIS INFORMATION HAS BEEN DEVELOPED FOR THE USE OF PUERTO RICO RESIDENTS AND IS BELIEVED TO MEET THE PUERTO RICO BUILDING CODE. ALL DRAWINGS MUST BE SEPARATELY APPROVED BY DDEC, PERMITS MANAGEMENT OFFICE UPON SUBMISSION OF A BUILDING PERMIT APPLICATION.

ISSUE LOG

No.	Date	Description

PROFESSIONAL SEALS:

SHEET TITLE:

Roof Framing Plans

SHEET INFORMATION:

JOB No.	Date Issued: 5/15/2020
Drawn By:	Sheet Number:
Checked By:	**S-007**
QC Review:	
Phase:	

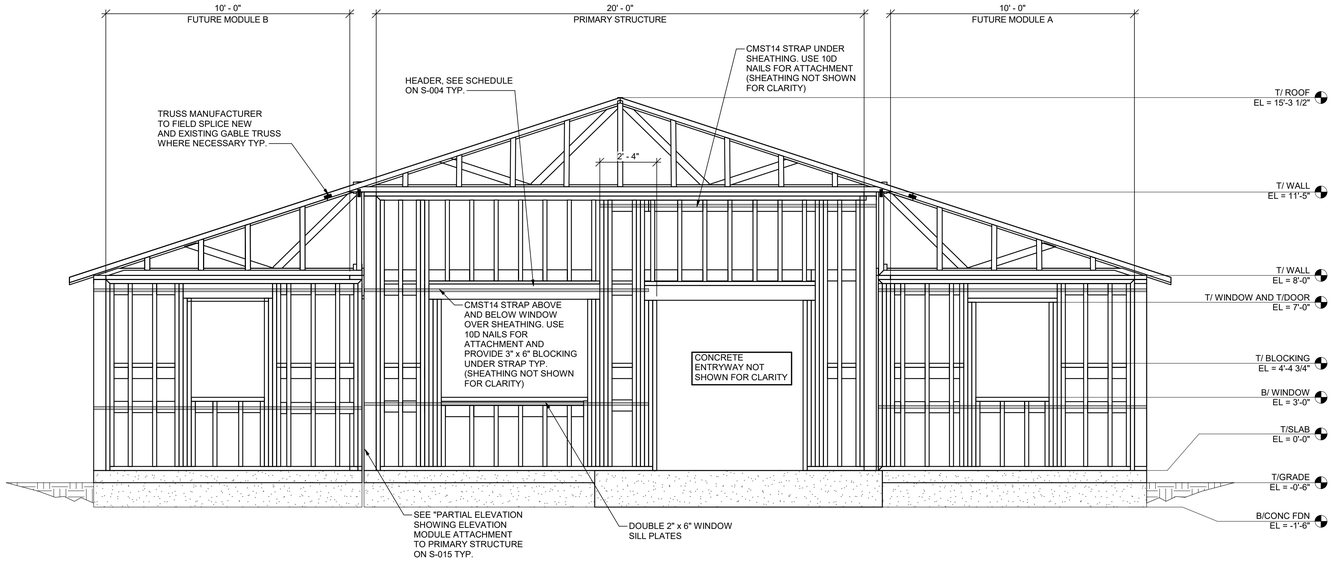

1 / S-008 **FRONT ELEVATION**
3/8" = 1'-0"

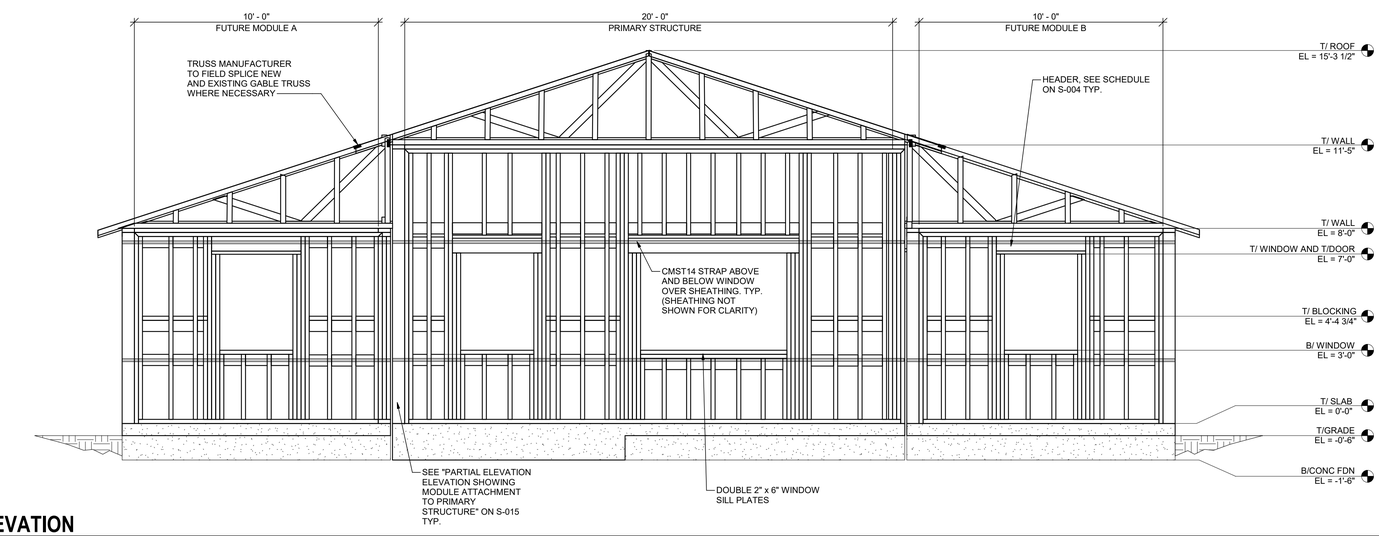

2 / S-008 **REAR ELEVATION**
3/8" = 1'-0"

0 1'-4" 2'-8" 5'-4"
SCALE: 3/8" = 1'-0"

ORIGINAL SHEET SIZE-24 x 36
OTHERWISE SCALES ARE INACCURATE

NOT FOR CONSTRUCTION

CONSULTANT:

CLIENT:

PROJECT NAME:

ONE STORY WOOD HOME

NOTE: PRIOR TO CONSTRUCTION CONTACT PUERTO RICO DEPARTMENT OF ECONOMIC DEVELOPMENT AND COMMERCE (DDEC), PERMITS MANAGEMENT OFFICE (OGPe-DDEC) FOR BUILDING REQUIREMENTS IN PUERTO RICO. THIS INFORMATION HAS BEEN DEVELOPED FOR THE USE OF PUERTO RICO RESIDENTS AND IS BELIEVED TO MEET THE PUERTO RICO BUILDING CODE. ALL DRAWINGS MUST BE SEPARATELY APPROVED BY DDEC, PERMITS MANAGEMENT OFFICE UPON SUBMISSION OF A BUILDING PERMIT APPLICATION.

ISSUE LOG

No.	Date	Description

PROFESSIONAL SEALS:

SHEET TITLE:

Primary Structure Elevations

SHEET INFORMATION:

JOB No.	Date Issued: 5/15/2020
Drawn By:	Sheet Number:
Checked By:	**S-008**
QC Review:	
Phase:	

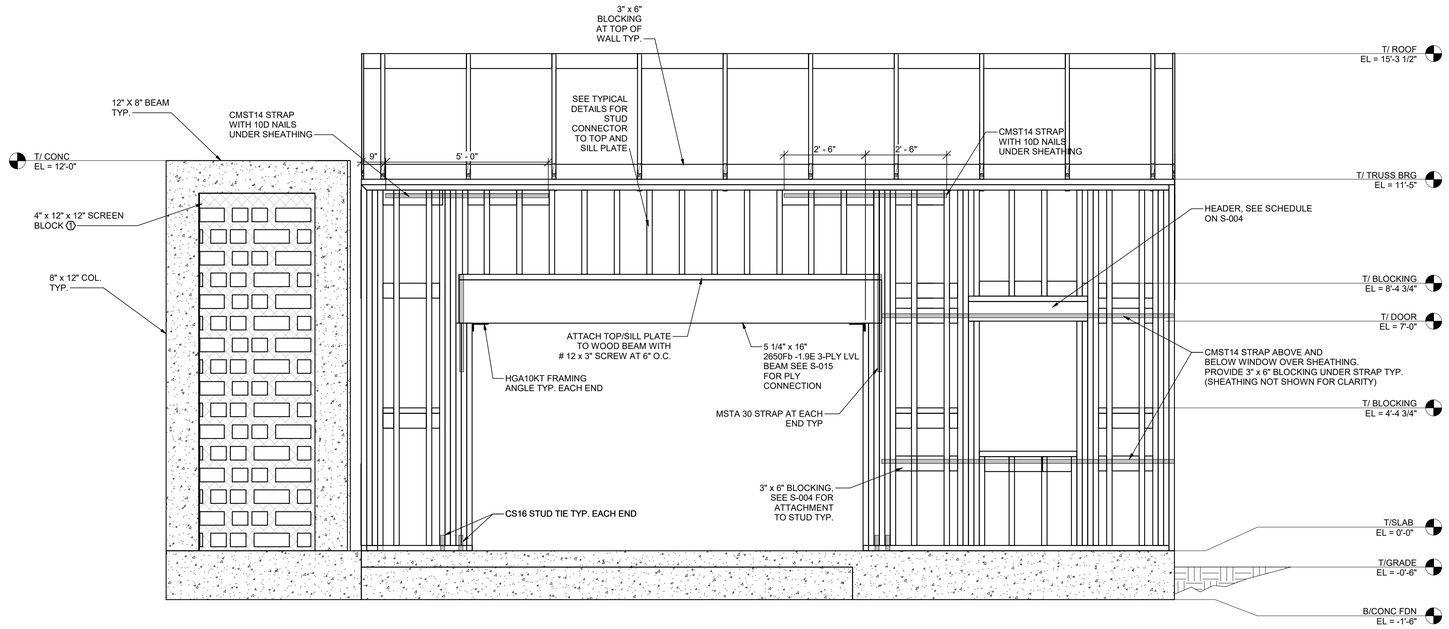

1 S-009 RIGHT ELEVATION PRIMARY RESIDENCE

1/2" = 1'-0"

DRAWING KEY NOTES:

① SCREEN BLOCK TO HAVE MINIMUM 30% OPEN AREA AND MINIMUM 2000 PSI NET AREA COMPRESSIVE STRENGTH. PROVIDE 9 GA. TRUSS TYPE JOINT REINFORCEMENT AT EVERY COURSE AND EXTEND 4" INTO COLUMN.

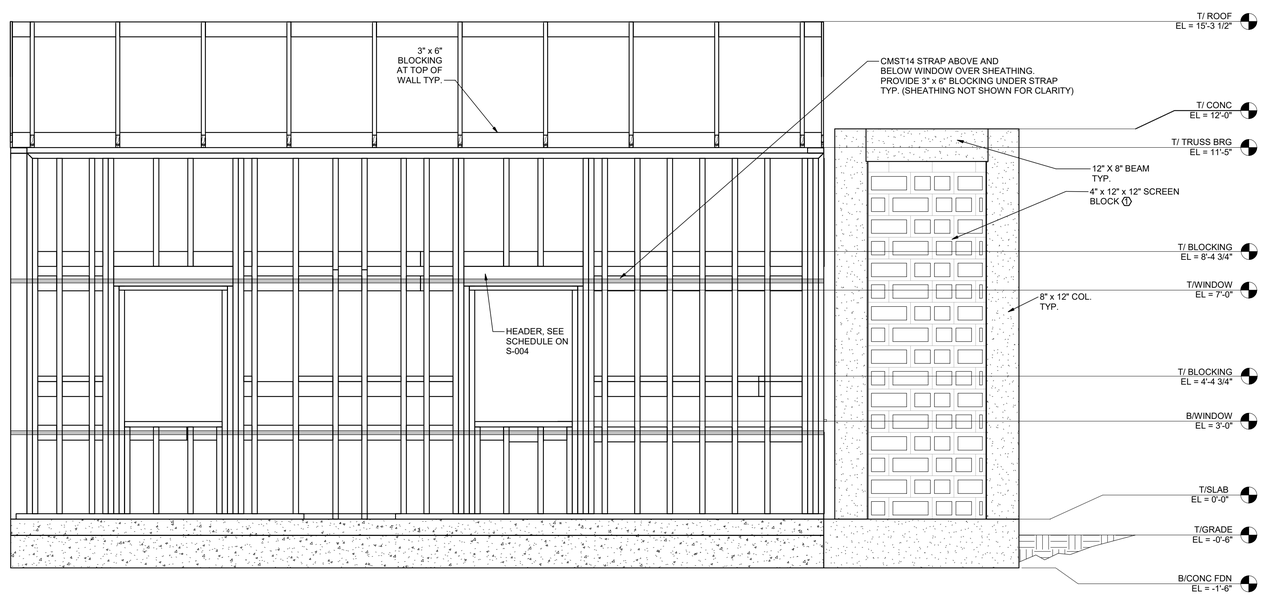

2 S-009 LEFT ELEVATION PRIMARY RESIDENCE

1/2" = 1'-0"

0 1'-0" 2'-0" 4'-0"

SCALE: 1/2" = 1'-0"

ORIGINAL SHEET SIZE-24 x 36
OTHERWISE SCALES ARE INACCURATE

NOT FOR CONSTRUCTION

CONSULTANT:

CLIENT:

PROJECT NAME:

ONE STORY WOOD HOME

NOTE: PRIOR TO CONSTRUCTION CONTACT PUERTO RICO DEPARTMENT OF ECONOMIC DEVELOPMENT AND COMMERCE (DDEC), PERMITS MANAGEMENT OFFICE (OGPe-DDEC) FOR BUILDING REQUIREMENTS IN PUERTO RICO. THIS INFORMATION HAS BEEN DEVELOPED FOR THE USE OF PUERTO RICO RESIDENTS AND IS BELIEVED TO MEET THE PUERTO RICO BUILDING CODE. ALL DRAWINGS MUST BE SEPARATELY APPROVED BY DDEC, PERMITS MANAGEMENT OFFICE UPON SUBMISSION OF A BUILDING PERMIT APPLICATION.

ISSUE LOG

No.	Date	Description

PROFESSIONAL SEALS:

SHEET TITLE:

Primary Structure Elevations

SHEET INFORMATION:

JOB No.	Date Issued: 5/15/2020
Drawn By:	Sheet Number:
Checked By:	**S-009**
QC Review:	
Phase:	

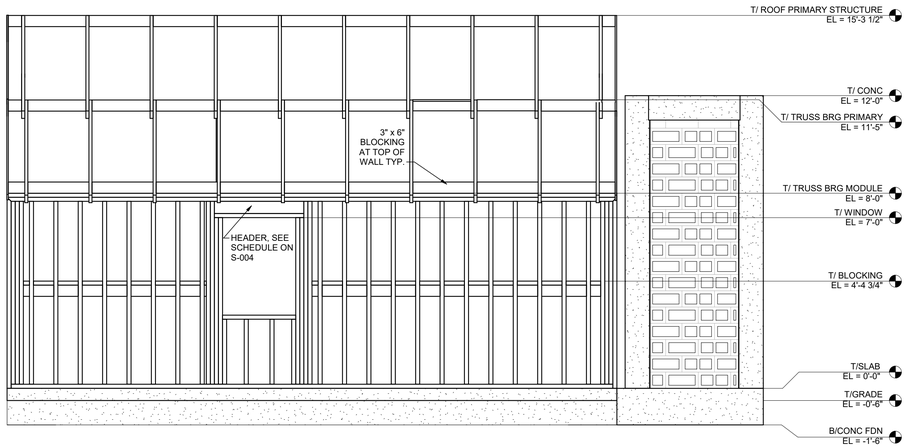

1 S-010 **EXPANSION MODULE B LEFT ELEVATION**
3/8" = 1'-0"

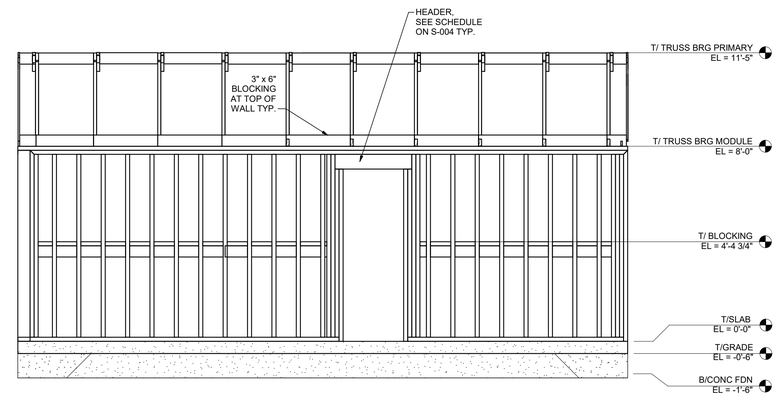

4 S-010 **EXPANSION MODULE B RIGHT ELEVATION (INTERIOR SIDE)**
3/8" = 1'-0"

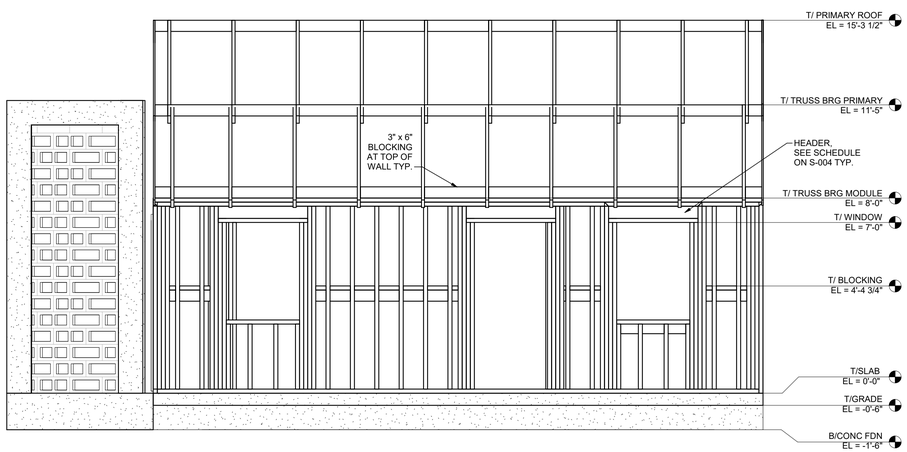

2 S-010 **EXPANSION MODULE A RIGHT ELEVATION**
3/8" = 1'-0"

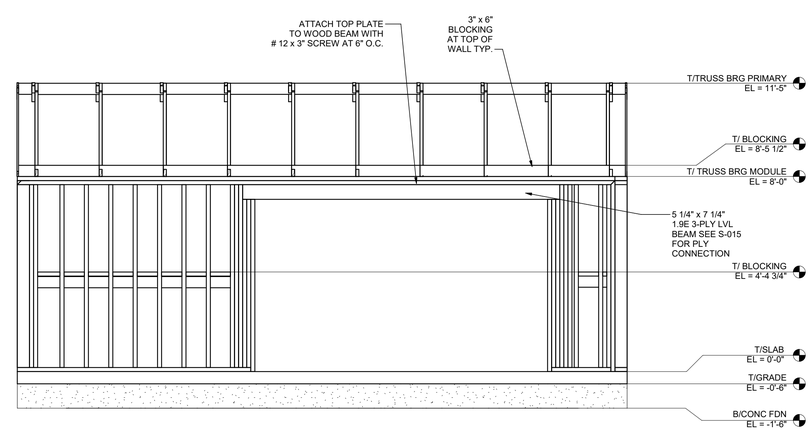

3 S-010 **EXPANSION MODULE A LEFT ELEVATION (INTERIOR SIDE)**
3/8" = 1'-0"

0 1'-4" 2'-8" 5'-4"
SCALE: 3/8" = 1'-0"

ORIGINAL SHEET SIZE-24 x 36
OTHERWISE SCALES ARE INACCURATE

NOT FOR CONSTRUCTION

CONSULTANT:

CLIENT:

PROJECT NAME:

ONE STORY WOOD HOME

NOTE: PRIOR TO CONSTRUCTION CONTACT PUERTO RICO DEPARTMENT OF ECONOMIC DEVELOPMENT AND COMMERCE (DDEC), PERMITS MANAGEMENT OFFICE (OGPe-DDEC) FOR BUILDING REQUIREMENTS IN PUERTO RICO. THIS INFORMATION HAS BEEN DEVELOPED FOR THE USE OF PUERTO RICO RESIDENTS AND IS BELIEVED TO MEET THE PUERTO RICO BUILDING CODE. ALL DRAWINGS MUST BE SEPARATELY APPROVED BY DDEC, PERMITS MANAGEMENT OFFICE UPON SUBMISSION OF A BUILDING PERMIT APPLICATION.

ISSUE LOG

No.	Date	Description

PROFESSIONAL SEALS:

SHEET TITLE:

Expansion Module Structure Elevations

SHEET INFORMATION:

JOB No.	Date Issued: 5/15/2020
Drawn By:	Sheet Number:
Checked By:	**S-010**
QC Review:	
Phase:	

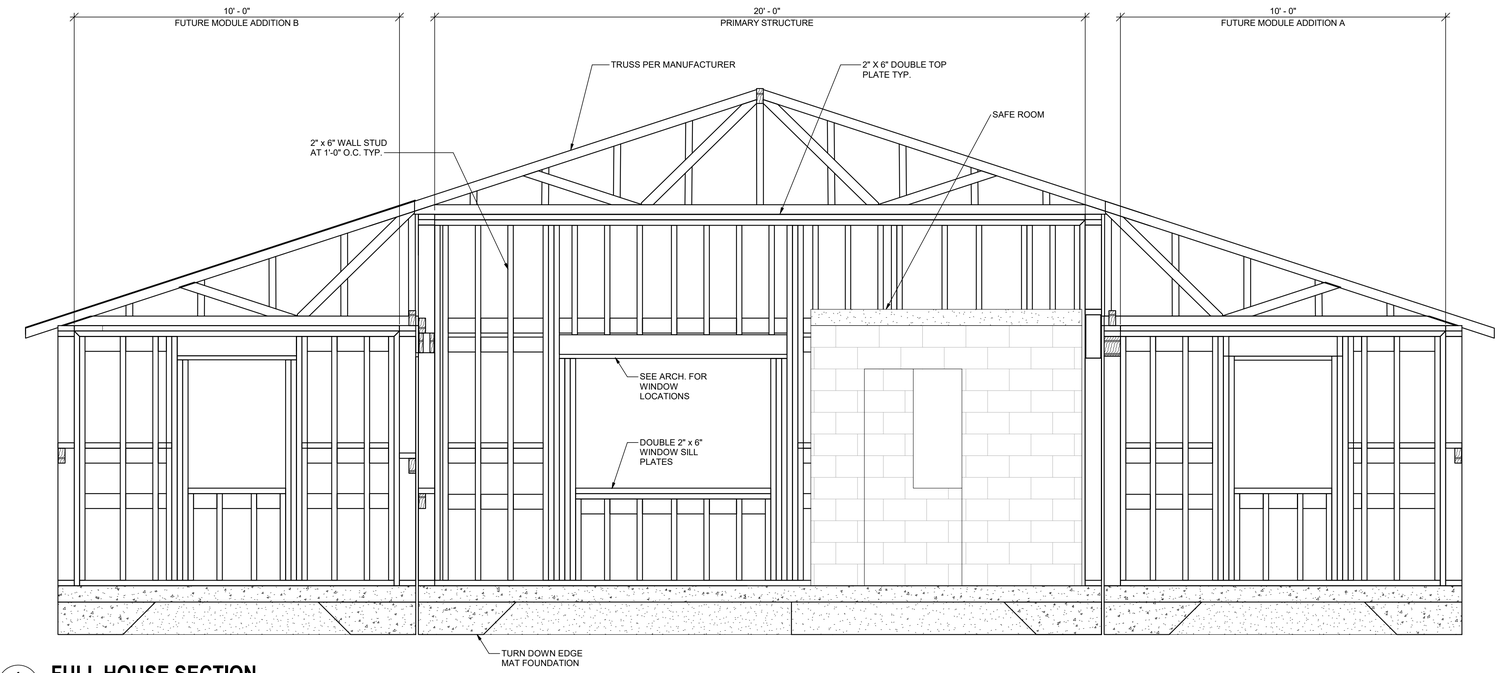

1
S-011

FULL HOUSE SECTION

1/2" = 1'-0"

0 1'-0" 2'-0" 4'-0"

SCALE: 1/2" = 1'-0"

ORIGINAL SHEET SIZE-24 x 36
OTHERWISE SCALES ARE INACCURATE

NOT FOR CONSTRUCTION

CONSULTANT:

CLIENT:

PROJECT NAME:

ONE STORY WOOD HOME

NOTE: PRIOR TO CONSTRUCTION CONTACT PUERTO RICO DEPARTMENT OF ECONOMIC DEVELOPMENT AND COMMERCE (DDEC), PERMITS MANAGEMENT OFFICE (OGPe-DDEC) FOR BUILDING REQUIREMENTS IN PUERTO RICO. THIS INFORMATION HAS BEEN DEVELOPED FOR THE USE OF PUERTO RICO RESIDENTS AND IS BELIEVED TO MEET THE PUERTO RICO BUILDING CODE. ALL DRAWINGS MUST BE SEPARATELY APPROVED BY DDEC, PERMITS MANAGEMENT OFFICE UPON SUBMISSION OF A BUILDING PERMIT APPLICATION.

ISSUE LOG

No.	Date	Description

PROFESSIONAL SEALS:

SHEET TITLE:

Full House Section

SHEET INFORMATION:

JOB No.	Date Issued: 5/15/2020
Drawn By:	Sheet Number:
Checked By:	**S-011**
QC Review:	
Phase:	

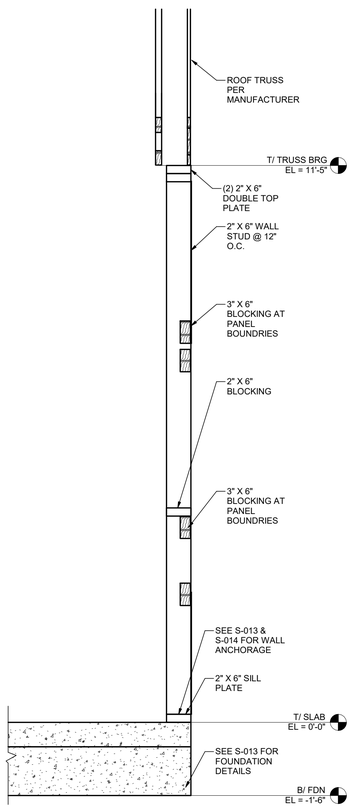

1 S-012 **TYPICAL WALL SECTION**
3/4" = 1'-0"

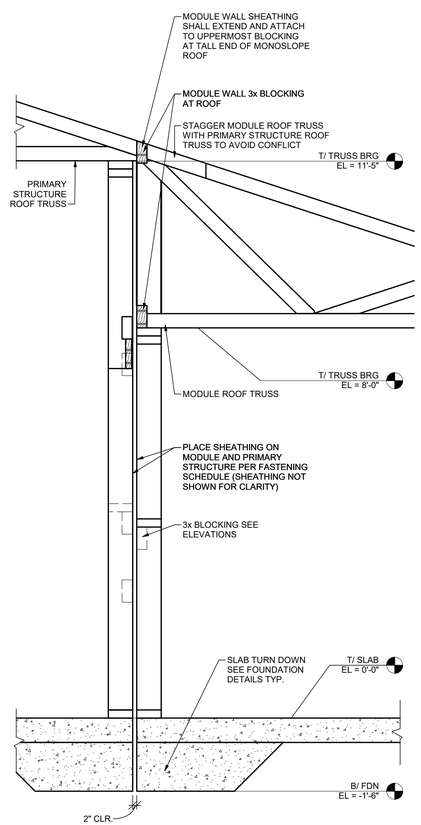

2 S-012 **TYPICAL WALL SECTION AT PRIMARY/MODULE WALL**
3/4" = 1'-0"

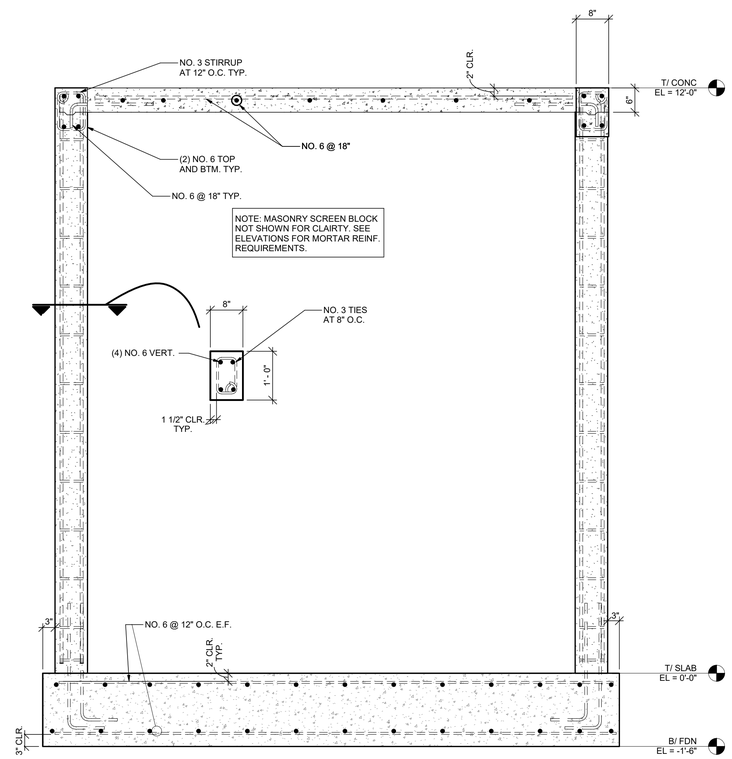

3 S-012 **OPTIONAL CONCRETE ENTRYWAY**
3/4" = 1'-0"

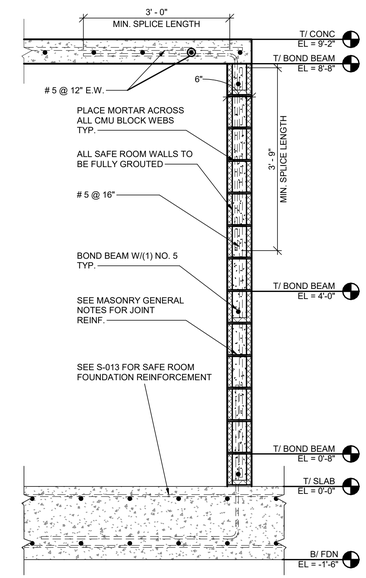

4 S-012 **SAFE ROOM WALL**
3/4" = 1'-0"

0 0'-8" 1'-4" 2'-8"
SCALE: 3/4" = 1'-0"

ORIGINAL SHEET SIZE-24 x 36
OTHERWISE SCALES ARE INACCURATE

NOT FOR CONSTRUCTION

CONSULTANT:

CLIENT:

PROJECT NAME:

ONE STORY WOOD HOME

NOTE: PRIOR TO CONSTRUCTION CONTACT PUERTO RICO DEPARTMENT OF ECONOMIC DEVELOPMENT AND COMMERCE (DDEC), PERMITS MANAGEMENT OFFICE (OGPe-DDEC) FOR BUILDING REQUIREMENTS IN PUERTO RICO. THIS INFORMATION HAS BEEN DEVELOPED FOR THE USE OF PUERTO RICO RESIDENTS AND IS BELIEVED TO MEET THE PUERTO RICO BUILDING CODE. ALL DRAWINGS MUST BE SEPARATELY APPROVED BY DDEC, PERMITS MANAGEMENT OFFICE UPON SUBMISSION OF A BUILDING PERMIT APPLICATION.

ISSUE LOG

No.	Date	Description

PROFESSIONAL SEALS:

SHEET TITLE:

Wall Sections

SHEET INFORMATION:

JOB No.	Date Issued: 5/15/2020
Drawn By:	Sheet Number:
Checked By:	**S-012**
QC Review:	
Phase:	

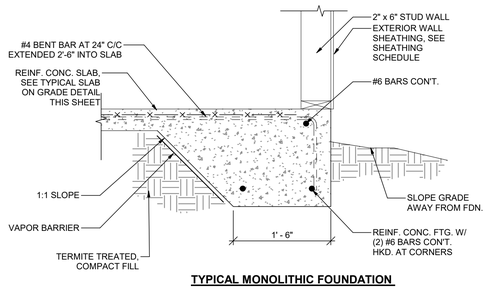

1 S-013 TYPICAL FOUNDATION DETAIL

1" = 1'-0"

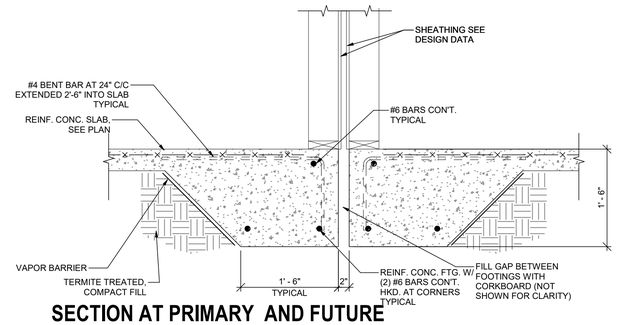

2 S-013 SECTION AT PRIMARY AND FUTURE MODULE STRUCTURE FOUNDATION

1" = 1'-0"

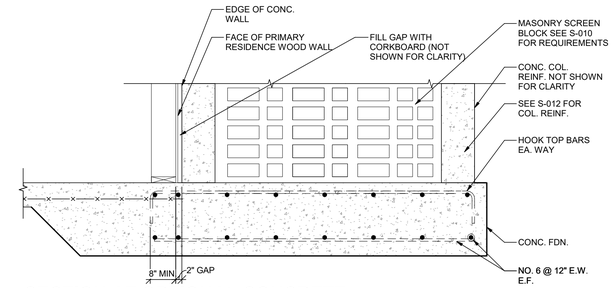

3 S-013 SECTION AT OPTIONAL CONCRETE ENTRYWAY

3/4" = 1'-0"

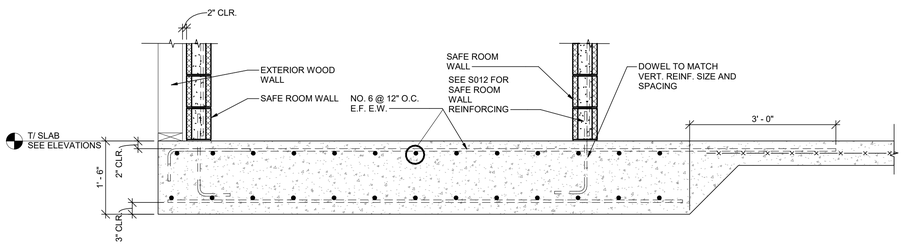

4 S-013 SECTION AT SAFE ROOM FOUNDATION

3/4" = 1'-0"

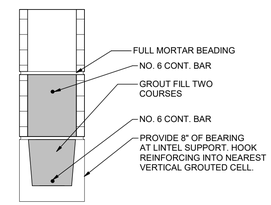

5 S-013 TYPICAL SAFE ROOM LINTEL DETAIL

1 1/2" = 1'-0"

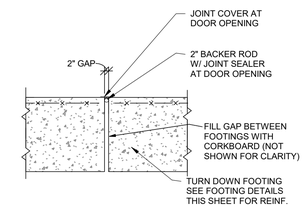

6 S-013 TYPICAL FLOOR JOINT DETAIL

3/4" = 1'-0"

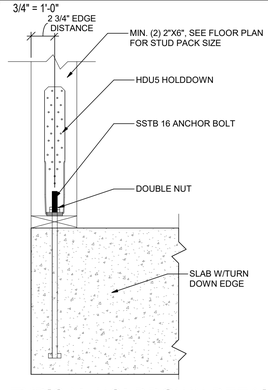

7 S-013 TYPICAL HOLDDOWN DETAIL

1 1/2" = 1'-0"

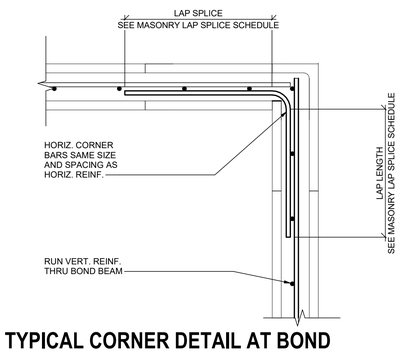

8 S-013 TYPICAL CORNER DETAIL AT BOND BEAM

1 1/2" = 1'-0"

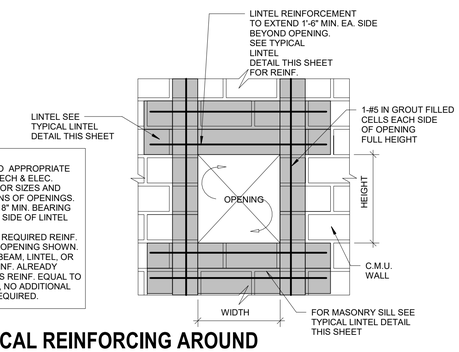

NOTES:
1. REFER TO APPROPRIATE ARCH., MECH & ELEC. DWGS. FOR SIZES AND LOCATIONS OF OPENINGS.
2. PROVIDE 8" MIN. BEARING ON EACH SIDE OF LINTEL
3. MINIMUM REQUIRED REINF. AROUND OPENING SHOWN. IF BOND BEAM, LINTEL, OR WALL REINF. ALREADY PROVIDES REINF. EQUAL TO MINIMUM, NO ADDITIONAL REINF. REQUIRED.

9 S-013 TYPICAL REINFORCING AROUND OPENINGS

3/4" = 1'-0"

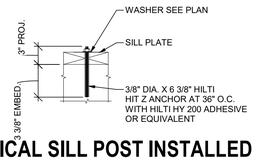

10 S-013 TYPICAL SILL POST INSTALLED ANCHOR (OPTIONAL)

1 1/2" = 1'-0"

11 S-013 TYPICAL SLAB ON GRADE DETAIL

3/4" = 1'-0"

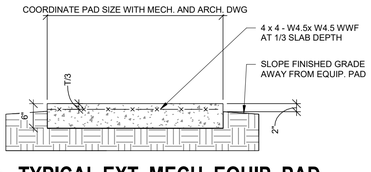

12 S-013 TYPICAL EXT. MECH. EQUIP. PAD

3/4" = 1'-0"

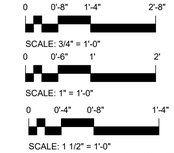

SCALE: 1 1/2" = 1'-0"
ORIGINAL SHEET SIZE-24 x 36
OTHERWISE SCALES ARE INACCURATE

NOT FOR CONSTRUCTION

CONSULTANT:

CLIENT:

PROJECT NAME:

ONE STORY WOOD HOME

NOTE: PRIOR TO CONSTRUCTION CONTACT PUERTO RICO DEPARTMENT OF ECONOMIC DEVELOPMENT AND COMMERCE (DDEC), PERMITS MANAGEMENT OFFICE (OGPe-DDEC) FOR BUILDING REQUIREMENTS IN PUERTO RICO. THIS INFORMATION HAS BEEN DEVELOPED FOR THE USE OF PUERTO RICO RESIDENTS AND IS BELIEVED TO MEET THE PUERTO RICO BUILDING CODE. ALL DRAWINGS MUST BE SEPARATELY APPROVED BY DDEC, PERMITS MANAGEMENT OFFICE UPON SUBMISSION OF A BUILDING PERMIT APPLICATION.

ISSUE LOG

No.	Date	Description

PROFESSIONAL SEALS:

SHEET TITLE:

Foundation and Masonry Details

SHEET INFORMATION:

JOB No.	Date Issued: 5/15/2020
Drawn By:	Sheet Number:
Checked By:	S-013
QC Review:	
Phase:	

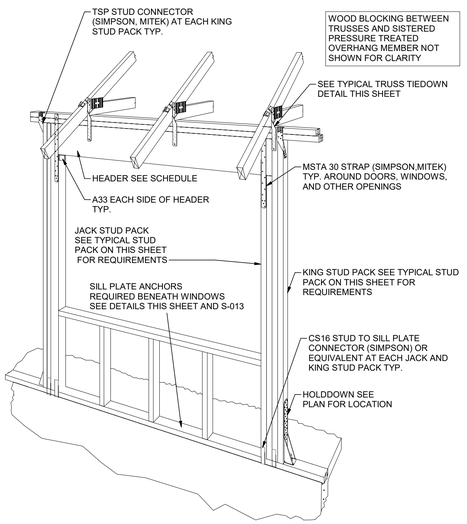

1 S-014 TYPICAL OPENING DETAILS

N.T.S.

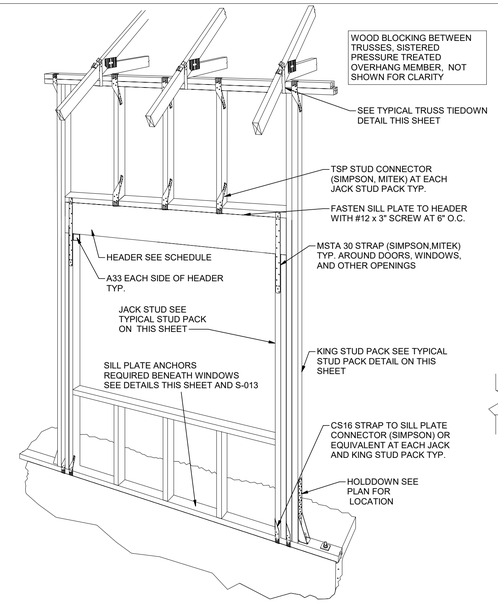

2 S-014 TYPICAL TALL WALL OPENING DETAILS

N.T.S.

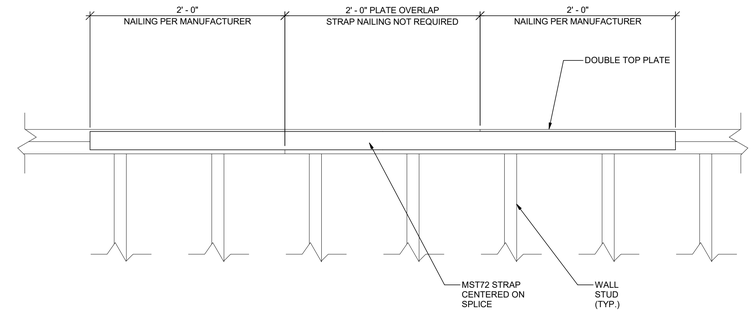

3 S-014 TOP PLATE SPLICE DETAIL

1 1/2" = 1'-0"

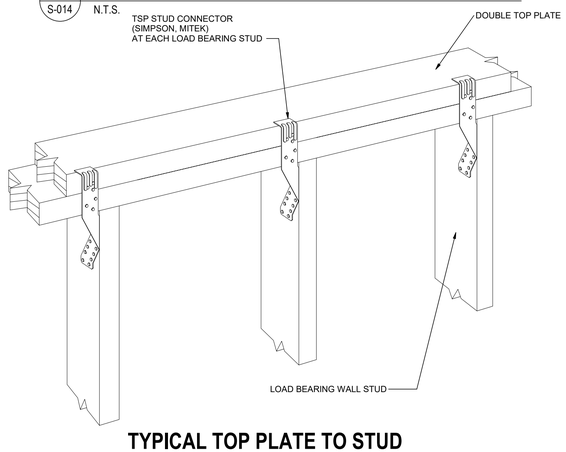

4 S-014 TYPICAL TOP PLATE TO STUD CONNECTION

N.T.S.

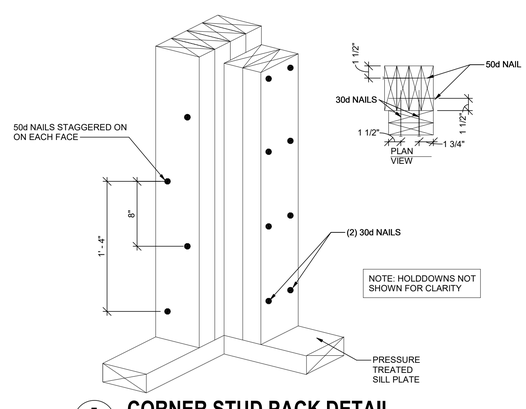

5 S-014 CORNER STUD PACK DETAIL

N.T.S.

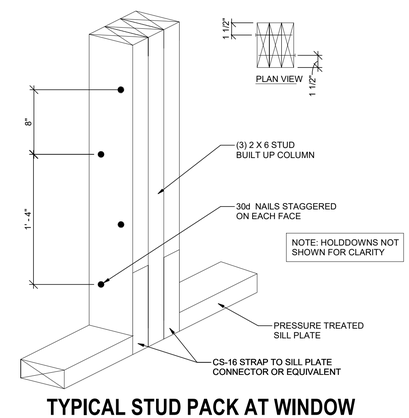

6 S-014 TYPICAL STUD PACK AT WINDOW OPENING

N.T.S.

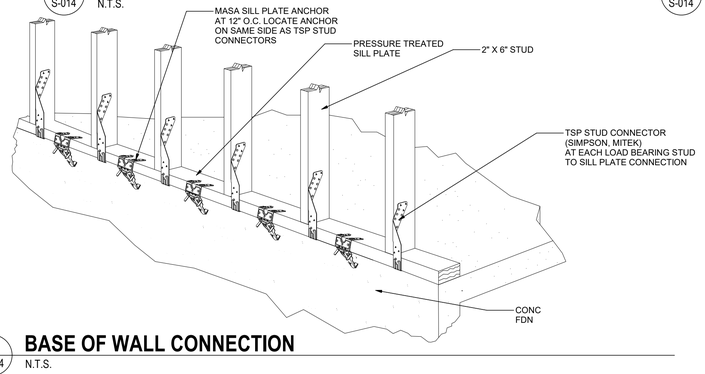

7 S-014 BASE OF WALL CONNECTION

N.T.S.

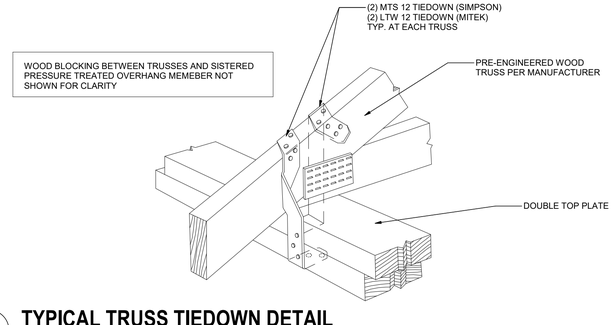

8 S-014 TYPICAL TRUSS TIEDOWN DETAIL

N.T.S.

0 0'-4" 0'-8" 1'-4"

SCALE: 1 1/2" = 1'-0"

ORIGINAL SHEET SIZE-24 x 36
OTHERWISE SCALES ARE INACCURATE

NOT FOR CONSTRUCTION

CONSULTANT:

CLIENT:

PROJECT NAME:

ONE STORY WOOD HOME

NOTE: PRIOR TO CONSTRUCTION CONTACT PUERTO RICO DEPARTMENT OF ECONOMIC DEVELOPMENT AND COMMERCE (DDEC), PERMITS MANAGEMENT OFFICE (OGPe-DDEC) FOR BUILDING REQUIREMENTS IN PUERTO RICO. THIS INFORMATION HAS BEEN DEVELOPED FOR THE USE OF PUERTO RICO RESIDENTS AND IS BELIEVED TO MEET THE PUERTO RICO BUILDING CODE. ALL DRAWINGS MUST BE SEPARATELY APPROVED BY DDEC, PERMITS MANAGEMENT OFFICE UPON SUBMISSION OF A BUILDING PERMIT APPLICATION.

ISSUE LOG

No.	Date	Description

PROFESSIONAL SEALS:

SHEET TITLE:

Wood Framing Details

SHEET INFORMATION:

JOB No.	Date Issued: 5/15/2020
Drawn By:	Sheet Number:
Checked By:	**S-014**
QC Review:	
Phase:	

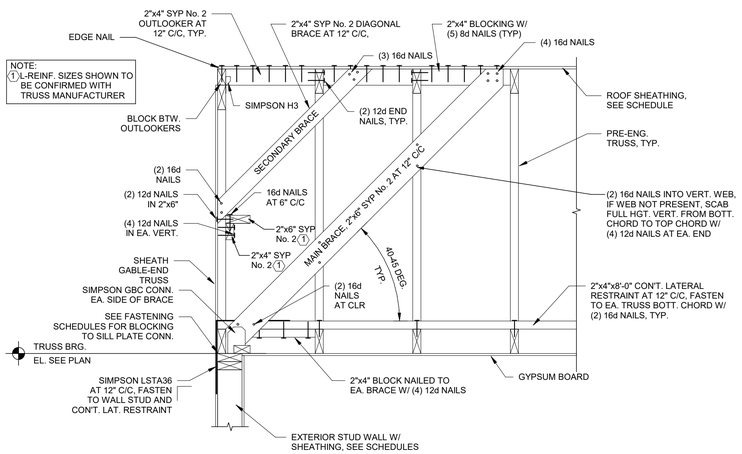

BRICK WALL-BRICK GABLE/SIDING WALL-SIDING GABLE

1 S-015 TYPICAL GABLE END BRACING DETAILS

3/4" = 1'-0"

NOTES:

1. CHECK THE TRUSS DESIGN DRAWINGS (TDD) TO DETERMINE WHICH WEB MEMBERS (IF ANY) REQUIRE RESTRAINT.
2. RESTRAIN AND BRACE WITH:
   A. INDIVIDUAL WEB MEMBER REINFORCEMENT (PER THE TRUSS MANUFACTURER) OR.
   B. CONTINUOUS LATERAL RESTRAINT (PER THE TRUSS MANUFACTURER) & DIAGONAL BRACING.
      1. ATTACH EACH ROW OF CLR AT THE LOCATIONS SHOWN ON THE TDD.
      2. INSTALL THE DIAGONAL BRAING SHOWN IN THE DETAIL AT AN ANGLE OF LESS THAN OR EQUAL TO 45 DEGREES TO THE CLR AND POSITION SO THAT IT CROSSES THE WEB IN CLOSE PROXIMITY TO THE CLR. ATTACH THE DIAGONAL BRACE AS CLOSE TO THE TOP AND BOTTOM CHORDS AS POSSIBLE AND TO EACH WEB IT CROSSES. REPEAT EVERY 10 FT. OR LESS.

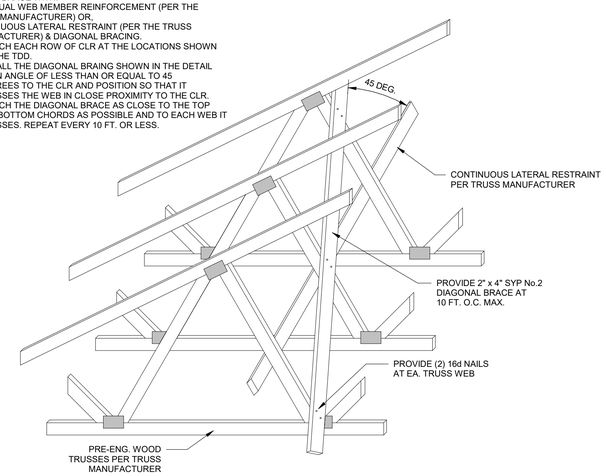

2 S-015 BRACING AT CONTINUOUS LATERAL RESTRAINT (CLR)

N.T.S.

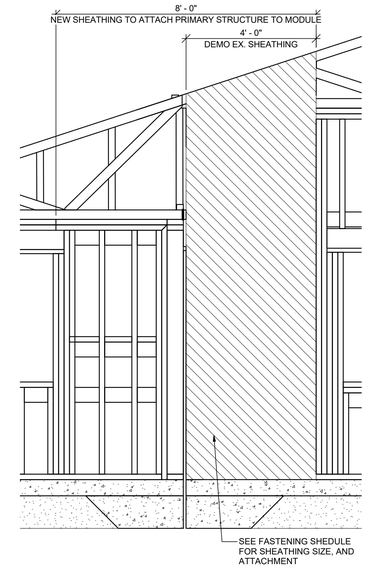

3 S-015 PARTIAL ELEVATION SHOWING MODULE ATTACHMENT TO PRIMARY STRUCTURE

1/2" = 1'-0"

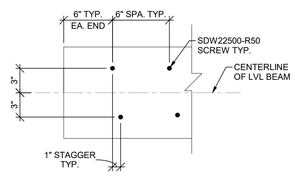

4 S-015 TYPICAL LVL BEAM PLY CONNECTION

1 1/2" = 1'-0"

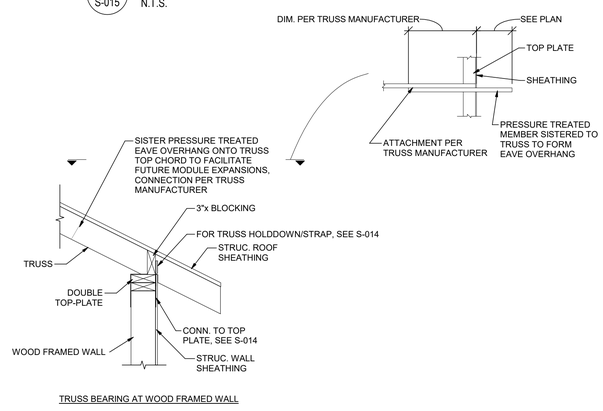

TRUSS BEARING AT WOOD FRAMED WALL

5 S-015 TYPICAL ROOF TRUSS BEARING

3/4" = 1'-0"

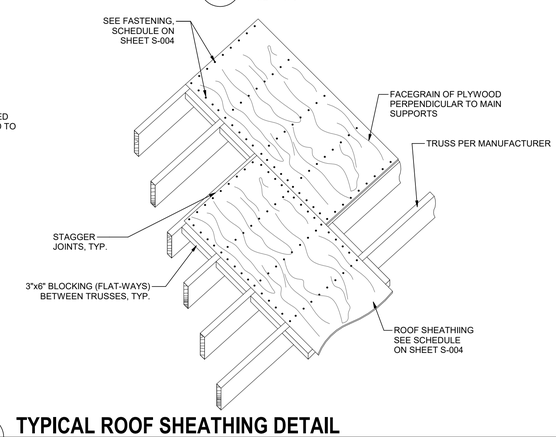

6 S-015 TYPICAL ROOF SHEATHING DETAIL

N.T.S.

0 1'-4" 2'-8" 5'-4"
SCALE: 3/8" = 1'-0"

0 0'-8" 1'-4" 2'-8"
SCALE: 3/4" = 1'-0"

0 0'-4" 0'-8" 1'-4"
SCALE: 1 1/2" = 1'-0"

NOT FOR CONSTRUCTION

CONSULTANT:

CLIENT:

PROJECT NAME:

ONE STORY WOOD HOME

NOTE: PRIOR TO CONSTRUCTION CONTACT PUERTO RICO DEPARTMENT OF ECONOMIC DEVELOPMENT AND COMMERCE (DDEC), PERMITS MANAGEMENT OFFICE (OGPe-DDEC) FOR BUILDING REQUIREMENTS IN PUERTO RICO. THIS INFORMATION HAS BEEN DEVELOPED FOR THE USE OF PUERTO RICO RESIDENTS AND IS BELIEVED TO MEET THE PUERTO RICO BUILDING CODE. ALL DRAWINGS MUST BE SEPARATELY APPROVED BY DDEC, PERMITS MANAGEMENT OFFICE UPON SUBMISSION OF A BUILDING PERMIT APPLICATION.

ISSUE LOG

No.	Date	Description

PROFESSIONAL SEALS:

SHEET TITLE:

Wood Framing Details

SHEET INFORMATION:

JOB No.	Date Issued: 5/15/2020
Drawn By:	Sheet Number:
Checked By:	S-015
QC Review:	
Phase:	

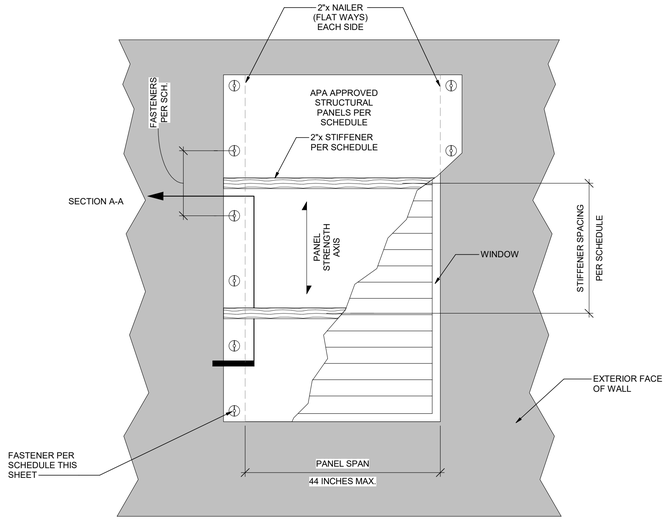

WIND-BORNE DEBRIS PROTECTION FOR GLAZED AND JALOUSIE WINDOW OPENINGS (NOT SUITABLE FOR SAFE ROOM WINDOWS)

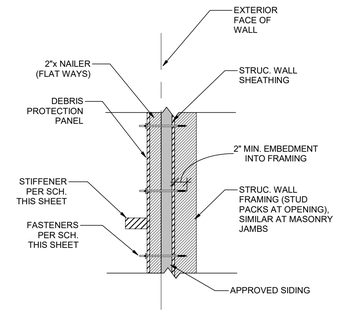

SECTION A-A

NOTES:

1. THE DETAIL'S INTENDED USE IS TO PROVIDE PROTECTION FROM WIND-BORNE DEBRIS. THE PREFERRED METHOD OF PROTECTION IS APPROVED IMPACT RESISTANT GLAZING OR APPROVED IMPACT RESISTANT COVERINGS (i.e. SHUTTER SYSTEM).
2. THE WOOD PANEL OPTION ONLY APPLIES TO OPENINGS WHICH DO NOT EXCEED 44 INCHES IN WIDTH. OPENINGS GREATER THAN 44 INCHES WIDE SHALL BE PROTECTED BY ONE OF THE PREFERRED METHODS MENTIONED IN THE ABOVE NOTE (NOTE #1).
3. DETAILS ARE ONLY APPLICABLE FOR ONE & TWO STORY BUILDINGS WITH A MEAN ROOF HEIGHT OF 30 FEET OR LESS.
4. ALL FASTENERS AND HARDWARE SHALL BE PERMANENTLY INSTALLED AND SHALL BE STAINLESS STEEL.
5. MIN. 3/4" DIA. WASHER REQUIRED AT EXTERIOR PANEL ATTACHMENT.
6. MIN. 2" EMBEDMENT OF SCREW THREADS INTO WOOD WALL FRAMING.
7. STRUCTURAL PANELS SHALL BE APA RATED CDX PLYWOOD.
8. PANELS SHALL BE PRE-CUT AND PRE-DRILLED FOR INSTALLATION EFFICIENCY.
9. THE HOMEOWNER SHALL BE RESPONSIBLE FOR ROUTINE INSPECTION AND MAINTENANCE OF THE SYSTEM TO ENSURE FUNCTIONALITY FOR THE INTENDED PURPOSE DURING A STORM EVENT.
10. PANELS ATTACHED TO MASONRY SHALL BE ATTACHED USING VIBRATION-RESISTANT ANCHORS HAVING AN ULTIMATE WITHDRAWAL CAPACITY OF NOT LESS THAN 1,500 POUNDS.
11. MASONRY ANCHORS SHALL BE A MINIMUM OF 2.5 INCHES AWAY FROM WINDOW AND DOOR EDGES.
12. FASTENERS SHALL BE LOCATED NOT LESS THAN 1 INCH FROM THE EDGE OF THE PANEL.

DEBRIS PROTECTION-STRUCTURAL PANEL SCHEDULE REQUIREMENTS

STRUCTURAL COMPONENT		PANEL SPAN
		MAX. STRUCTURAL PANEL SPAN = 44 INCHES
WOOD FRAMED	PANEL	5/8" APA RATED PRESSURE TREATED PLYWOOD
	FASTENER	1/4" DIAMETER LAG SCREWS AT 12" O.C.
	STIFFENER	2"x4" SYP No.2 PRESSURE TREATED AT 16" O.C.
MASONRY	PANEL	5/8" APA RATED PRESSURE TREATED PLYWOOD
	FASTENER	1/4" DIAMETER MASONRY SCREWS AT 12" O.C.
	STIFFENER	2"x4" SYP No.2 PRESSURE TREATED AT 16" O.C.

NOTES:

1. PANEL REQUIREMENTS SHOWN IN TABLE ABOVE ALSO CAN BE APPLIED AT DOOR OPENINGS WHICH DO NOT EXCEED 44 INCHES IN WIDTH.

2. FOR VENTED OPENINGS NOT EXCEEDING 2'-0" x 2'-0", PROVIDE PANEL WITH FASTENERS AS INDICATED IN TABLE ABOVE, STIFFENERS ARE NOT REQUIRED.

1 / S-016 **TYPICAL WINDOW PROTECTION DETAILS**
1" = 1'-0"

0 0'-6" 1' 2'
SCALE: 1" = 1'-0"

NOT FOR CONSTRUCTION

CONSULTANT:

CLIENT:

PROJECT NAME:

ONE STORY WOOD HOME

NOTE: PRIOR TO CONSTRUCTION CONTACT PUERTO RICO DEPARTMENT OF ECONOMIC DEVELOPMENT AND COMMERCE (DDEC), PERMITS MANAGEMENT OFFICE (OGPe-DDEC) FOR BUILDING REQUIREMENTS IN PUERTO RICO. THIS INFORMATION HAS BEEN DEVELOPED FOR THE USE OF PUERTO RICO RESIDENTS AND IS BELIEVED TO MEET THE PUERTO RICO BUILDING CODE. ALL DRAWINGS MUST BE SEPARATELY APPROVED BY DDEC, PERMITS MANAGEMENT OFFICE UPON SUBMISSION OF A BUILDING PERMIT APPLICATION.

ISSUE LOG

No.	Date	Description

PROFESSIONAL SEALS:

SHEET TITLE:

Window Protection Details

SHEET INFORMATION:

JOB No.	Date Issued: 5/15/2020
Drawn By:	Sheet Number:
Checked By:	**S-016**
QC Review:	
Phase:	